2023 HISPANIA CATALOGUE 50Hz

冷凝器 & 气冷器

泰州伊士班尼亚制冷设备有限公司

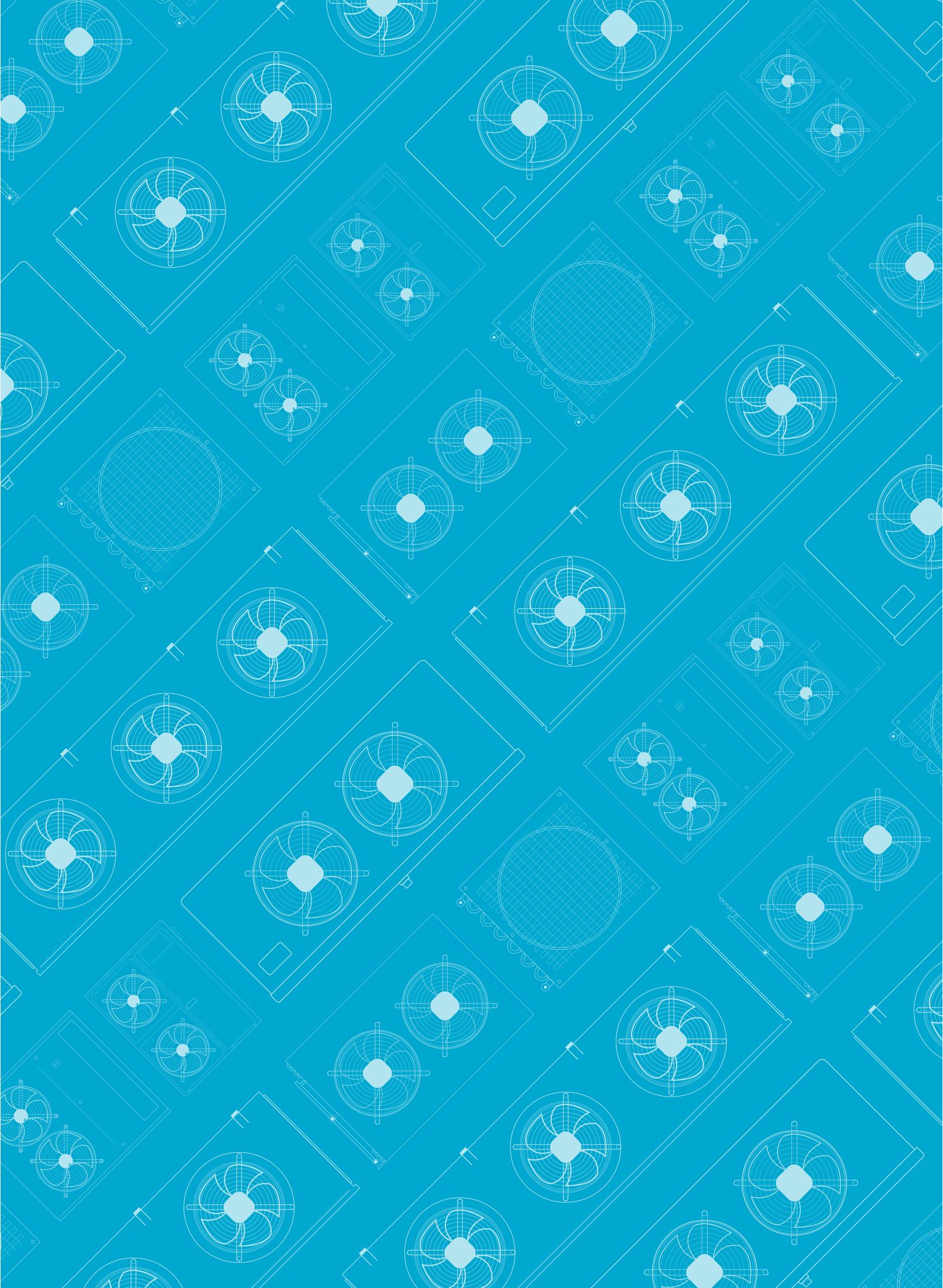

CONTENTS
目录

CONDENSERS AND GAS COOLERS

CONDENSERS

GAS COOLERS

冷凝器 & 气冷器

冷凝器

气冷器

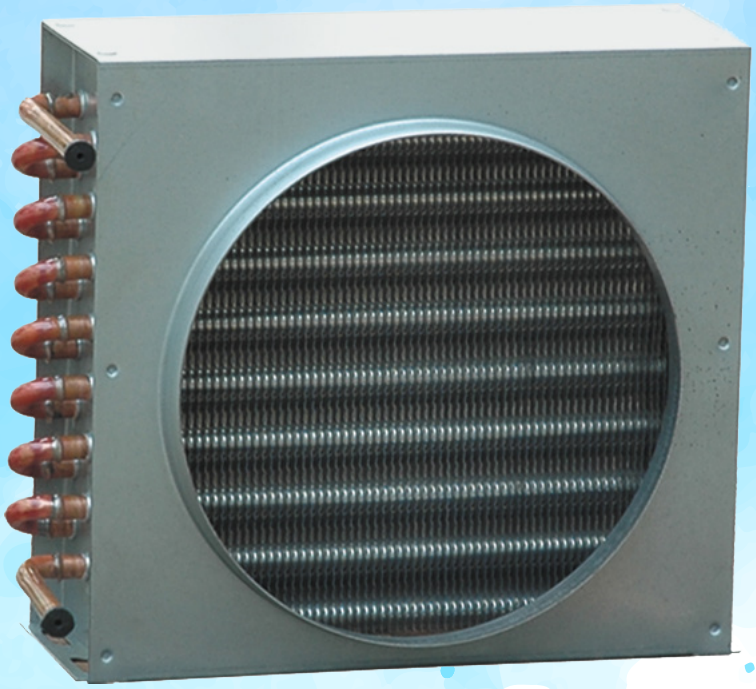

CONDENSERS
冷凝器

The exchange coils used in the HCA range are highly efficient with special profile aluminum fins and ø9.52 mm (HCA) or ø7 mm (HCAS) internally grooved tubes, with a reduced internal volume to reduce the necessary refrigerant charge, meeting the needs of the different international regulations for the reduction of gases with high greenhouse effect. They are supplied clean and tested under a pressure of 30 bar.

Supported to the casing by means of a “floating” system that avoids any kind of contact between the copper tubes and the supporting end plates, assu- ring a long life for the condenser without leaks.

HCA SERIES CONDENSERS
冷凝器系列 HCA

HCA的高效内芯采用铝箔和ø9.52mm(HCA)或ø7mm(HCAS)内螺纹铜管，通过减少管容积来降低冷媒充注量，满足全球温室气体的减排需求。所有内芯均经过清洁和30bar保压测试。

外壳采用“悬浮”结构，以避免铜管和侧板板之间产生接触，确保冷凝器的使用寿命长且无泄漏。

The standard electric fans used in this range have the following characteristics:

- ø200 mm: single-phase 230V/1/50 Hz with shade pole motor, with grid and short nozzle. Operating temperature -30ºC to +50ºC.

- ø250, 300, 350, 400 mm: single-phase 230V/1/50 Hz with external rotor, with type K grid and nozzle (short mouth). Operating temperature -40ºC to +50ºC.

-ø450, 500, 630 mm: three-phase 400V/3/50 Hz with external rotor, with type K grid and nozzle (short mouth). Operating temperature -40ºC to +50ºC.

No-coated galvanized steel casing with high resistance to corrosion and impacts.

For performance at work points other than those in this catalog, use the “Unit Selector Hybrid HISPANIA” software.

For special applications and additional information consult our Technical Department.

标准的风机配置如下：

-ø200mm：单相230V/1/50Hz罩极电机，带网罩和短出风口。工作温度-30ºC至+50ºC。

-ø250，300，350，400 mm：单相230V/1/50Hz外转子电机，带K网罩和短出风口。工作温度-30ºC至+50ºC。

-ø450，500，630 mm：三相400V/3/50Hz外转子电机，带K网罩和短出风口. 工作温度-40ºC至+50ºC。

无喷涂的镀锌板外壳，有较高的防腐蚀和抗震性能。

可使用“Unit Selector Hybrid HISPANIA”选型软件查询样册以外的工况性能。

更多需求和信息请联系Hispania。

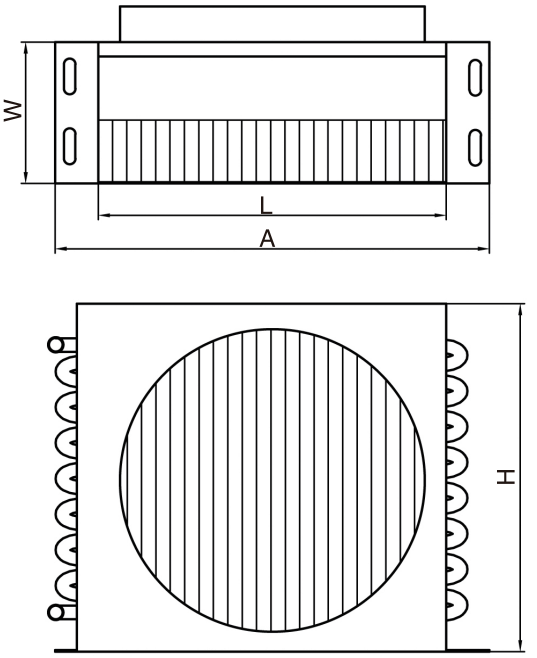
W
L
A
H

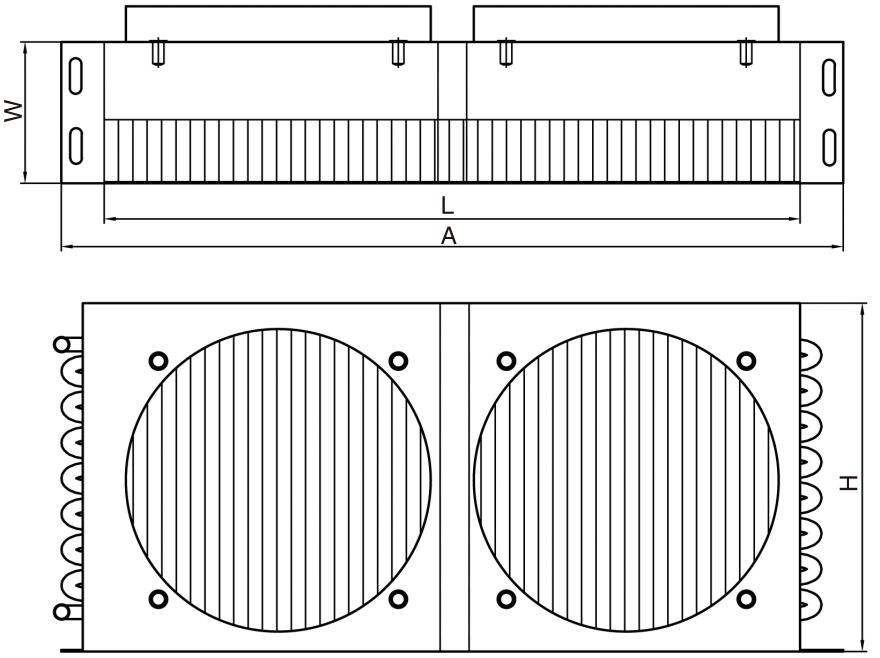
W
L
A
H

Model / 型号	Tubes N° 列数	Capacity / 制冷量 (kW)			Fin Spacing/ 片距 (mm)	Surface/ 面积 (m2)	Ventilator 风机		Dimension 尺寸 (mm)				Connection/ 接口尺寸	
		HP	R404A	R448A/ R449A			N° × ∅ (mm)	Air Flow 风量 (m3/h)	A	H	W	L	Inlet/ 进口	Outlet/ 出口
			DT1=15K	DT1=15K										
HCA-82	8 × 2	1/5	0.58	0.59	3.5	1.1	1 × 200	365	280	245	100	240	3/8"	3/8"
HCA-83	8 × 3	1/4	0.77	0.77	3.5	1.7	1 × 200	321	280	245	125	240	3/8"	3/8"
HCA-84	8 × 4	1/4	0.86	0.87	3.5	2.3	1 × 200	284	280	245	150	240	3/8"	3/8"
HCA-92	9 × 2	1/4	0.87	0.88	3.5	1.5	1 × 250	568	310	285	100	270	3/8"	3/8"
HCA-93	9 × 3	1/3	1.15	1.16	3.5	2.2	1 × 250	499	310	285	125	270	3/8"	3/8"
HCA-94	9 × 4	3/8	1.32	1.33	3.5	2.9	1 × 250	453	310	285	150	270	3/8"	3/8"
HCA-103	10 × 3	1/3	1.43	1.44	3.5	3.2	1 × 250	480	310	285	125	270	3/8"	3/8"
HCA-104	10 × 4	3/8	1.43	1.44	3.5	3.2	1 × 250	480	310	285	150	270	3/8"	3/8"
HCA-114	11 × 4	1/2	1.66	1.67	3.5	3.9	1 × 250	538	340	290	150	300	3/8"	3/8"
HCA-124A	12 × 4	1/2	1.68	1.69	3.5	4.3	1 × 250	563	340	315	150	300	5/8"	1/2"
HCA-124B	12 × 4	5/8	2.95	2.98	3.5	5.0	1 × 300	1143	420	365	150	350	5/8"	1/2"
HCA-143	14 × 3	5/8	2.78	2.81	3.5	4.4	1 × 300	1322	420	365	150	350	5/8"	1/2"
HCA-144	14 × 4	5/8	3.31	3.34	3.5	5.9	1 × 300	1233	420	365	150	350	5/8"	1/2"
HCA-145	14 × 5	3/4	3.32	3.36	3.5	7.3	1 × 300	1155	420	365	175	350	3/4"	5/8"
HCA-163	16 × 3	7/8	4.53	4.58	3.5	6.2	1× 350	2366	500	420	150	430	5/8"	1/2"
HCA-164A	16 × 4	1	5.29	5.35	3.5	8.2	1 × 350	2202	500	420	150	430	3/4"	5/8"
HCA-164B	16 × 4	1.25	6.20	6.26	3.5	8.6	1 × 400	2705	520	465	200	450	3/4"	5/8"
HCA-165	16 × 5	1.5	6.70	6.77	3.5	10.7	1 × 400	2455	520	465	200	450	3/4"	5/8"
HCA-185	18 × 5	1.75	8.11	8.19	3.5	13.4	1 × 400	2841	570	465	200	500	3/4"	5/8"
HCA-104D	10 × 4	7/8	2.87	2.89	3.5	6.4	2 × 250	960	610	285	150	540	5/8"	1/2"
HCA-114D	11 × 4	7/8	3.32	3.34	3.5	7.9	2 × 250	1075	670	290	150	600	5/8"	1/2"
HCA-124D	12 × 4	1.25	5.91	5.97	3.5	10.0	2 × 300	2285	770	365	150	700	3/4"	5/8"
HCA-100S	14 × 3	1.5	6.72	6.78	2.5	11.9	2 × 300	2533	770	365	150	700	5/8"	1/2"
HCA-150K	14 × 4	1.8	7.48	7.54	2.5	15.9	2 × 300	2334	770	365	150	700	3/4"	5/8"
HCA-200L	16 × 3	2	10.75	10.85	2.5	15.6	2 × 350	4378	870	420	150	800	5/8"	1/2"
HCA-200S	18 × 3	2.5	11.58	11.69	2.5	17.5	2 × 350	4601	870	470	200	800	5/8"	1/2"
HCA-300S	18 × 4	3	13.14	13.25	2.5	23.4	2 × 350	4275	870	470	200	800	3/4"	5/8"
HCA-400E	20 × 4	3.5	16.38	16.50	2.5	34.9	2 × 350	5056	1145	520	200	1075	1-1/8"	3/4"
HCA-400S	20 × 4	4	19.12	19.28	2.5	34.9	2 × 400	6248	1145	520	200	1075	1-1/8"	7/8"
HCA-500T	22 × 5	5	21.67	21.83	2.5	48.0	2 × 400	6145	1145	600	230	1075	1-3/8"	7/8"
HCA-500S	22 × 5	7.5	28.15	28.38	2.5	48.0	2 × 450	8705	1145	600	230	1075	1-3/8"	7/8"
HCA-600T	22 × 5	9	34.45	34.75	2.5	53.1	2 × 500	10989	1260	600	230	1190	1-3/8"	7/8"
HCA-285	28 × 5	10	40.90	41.24	2.5	67.6	2 × 500	12698	1260	742	230	1190	1-3/8"	7/8"
HCA-286	28 × 6	15	66.67	67.42	2.5	102.3	2 × 630	20153	1570	742	400	1500	1-3/8"	7/8"
HCA-346	34 × 6	20	80.11	81.00	2.5	124.2	2 × 630	24105	1615	890	400	1500	1-3/8"	7/8"

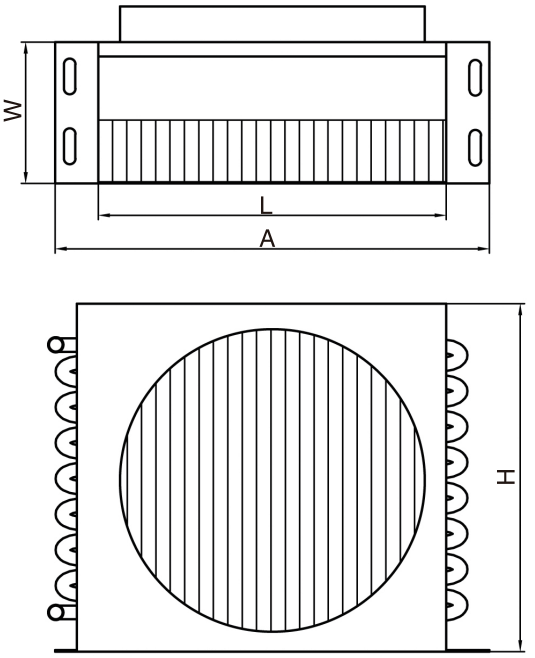
W
L
A
H

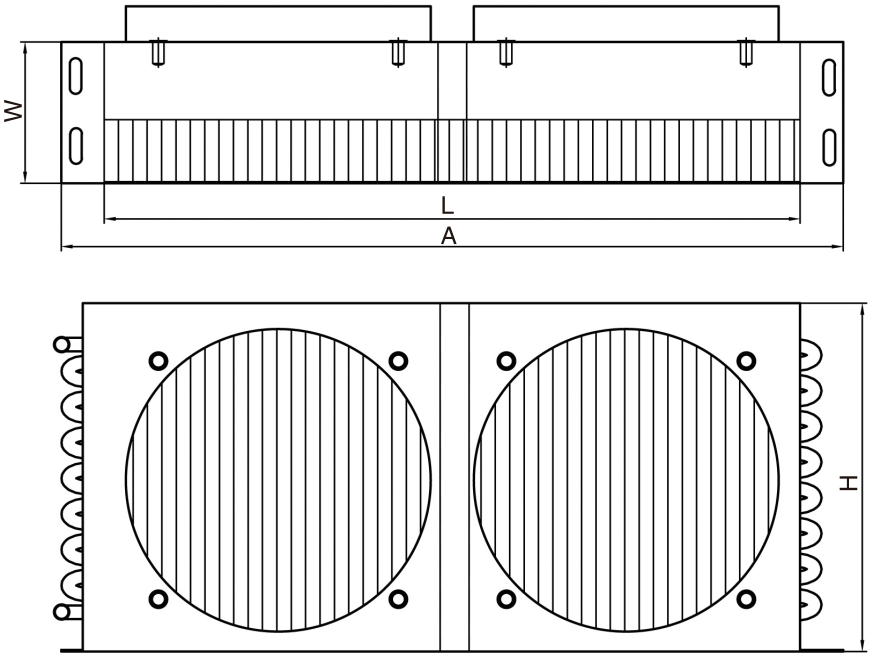
W
L
A
H

Model / 型号	Tubes N° 列数	Capacity / 制冷量 (kW)			Fin Spacing/ 片距 (mm)	Surface/ 面积 (m2)	Ventilator 风机		Dimension 尺寸 (mm)				Connection/ 接口尺寸	
		HP	R404A	R448A/ R449A			N° × ∅ (mm)	Air Flow 风量 (m3/h)	A	H	W	L	Inlet/ 进口	Outlet/ 出口
			DT1=15K	DT1=15K										
HCAS-82	8 × 2	1/5	0.57	0.57	3.5	1.2	1 × 200	352	280	245	100	240	3/8"	3/8"
HCAS-83	8 × 3	1/4	0.71	0.72	3.5	1.8	1 × 200	299	280	245	125	240	3/8"	3/8"
HCAS-84	8 × 4	1/4	0.79	0.80	3.5	2.4	1 × 200	264	280	245	150	240	3/8"	3/8"
HCAS-92	9 × 2	1/4	0.82	0.83	3.5	1.5	1 × 250	539	310	285	100	270	3/8"	3/8"
HCAS-93	9 × 3	1/3	1.06	1.07	3.5	2.3	1 × 250	471	310	285	125	270	3/8"	3/8"
HCAS-94	9 × 4	3/8	1.21	1.22	3.5	3.0	1 × 250	426	310	285	150	270	3/8"	3/8"
HCAS-103	10 × 3	1/3	1.31	1.32	3.5	3.3	1 × 250	454	310	285	125	270	3/8"	3/8"
HCAS-104	10 × 4	3/8	1.31	1.32	3.5	3.3	1 × 250	454	310	285	150	270	3/8"	3/8"
HCAS-114	11 × 4	1/2	1.50	1.51	3.5	4.1	1 × 250	509	340	290	150	300	3/8"	3/8"
HCAS-124A	12 × 4	1/2	1.57	1.58	3.5	4.5	1 × 250	534	340	315	150	300	5/8"	1/2"
HCAS-124B	12 × 4	5/8	2.70	2.72	3.5	5.2	1 × 300	1079	420	365	150	350	5/8"	1/2"
HCAS-143	14 × 3	5/8	2.58	2.60	3.5	4.5	1 × 300	1273	420	365	150	350	5/8"	1/2"
HCAS-144	14 × 4	5/8	3.02	3.05	3.5	6.1	1 × 300	1174	420	365	150	350	5/8"	1/2"
HCAS-145	14 × 5	3/4	3.15	3.19	3.5	7.6	1 × 300	1095	420	365	175	350	3/4"	5/8"
HCAS-163	16 × 3	7/8	4.18	4.22	3.5	6.4	1× 350	2268	500	420	150	430	5/8"	1/2"
HCAS-164A	16 × 4	1	4.91	4.95	3.5	8.5	1 × 350	2102	500	420	150	430	3/4"	5/8"
HCAS-164B	16 × 4	1.25	5.61	5.66	3.5	8.9	1 × 400	2513	520	465	200	450	3/4"	5/8"
HCAS-165	16 × 5	1.5	6.09	6.14	3.5	11.1	1 × 400	2269	520	465	200	450	3/4"	5/8"
HCAS-185	18 × 5	1.75	7.42	7.48	3.5	13.9	1 × 400	2686	570	465	200	500	3/4"	5/8"
HCAS-104D	10 × 4	7/8	2.63	2.64	3.5	6.7	2 × 250	907	610	285	150	540	5/8"	1/2"
HCAS-114D	11 × 4	7/8	3.02	3.04	3.5	8.2	2 × 250	1017	670	290	150	600	5/8"	1/2"
HCAS-124D	12 × 4	1.25	5.42	5.47	3.5	10.4	2 × 300	2157	770	365	150	700	3/4"	5/8"
HCAS-100S	14 × 3	1.5	6.13	6.19	2.5	12.5	2 × 300	2414	770	365	150	700	5/8"	1/2"
HCAS-150K	14 × 4	1.8	6.05	6.11	2.5	12.4	2 × 300	2414	770	365	150	700	3/4"	5/8"
HCAS-200L	16 × 3	2	9.32	9.47	2.5	16.3	2 × 350	4164	870	420	150	800	5/8"	1/2"
HCAS-200S	18 × 3	2.5	9.92	10.10	2.5	18.3	2 × 350	4406	870	470	200	800	5/8"	1/2"
HCAS-300S	18 × 4	3	11.41	11.59	2.5	24.4	2 × 350	4031	870	470	200	800	3/4"	5/8"
HCAS-400E	20 × 4	3.5	15.16	15.27	2.5	36.5	2 × 350	4856	1145	520	200	1075	1-1/8"	3/4"
HCAS-400S	20 × 4	4	17.44	17.60	2.5	36.5	2 × 400	5959	1145	520	200	1075	1-1/8"	7/8"
HCAS-500T	22 × 5	5	20.00	20.15	2.5	50.2	2 × 400	5853	1145	600	230	1075	1-3/8"	7/8"
HCAS-500S	22 × 5	7.5	25.21	25.47	2.5	50.2	2 × 450	8131	1145	600	230	1075	1-3/8"	7/8"
HCAS-600T	22 × 5	9	30.11	30.49	2.5	55.5	2 × 500	10184	1260	600	230	1190	1-3/8"	7/8"
HCAS-285	28 × 5	10	36.44	36.87	2.5	70.7	2 × 500	11993	1260	742	230	1190	1-3/8"	7/8"
HCAS-286	28 × 6	15	53.02	54.33	2.5	106.9	2 × 630	18220	1570	742	400	1500	1-3/8"	7/8"
HCAS-346	34 × 6	20	64.40	65.99	2.5	129.8	2 × 630	22134	1615	890	400	1500	1-3/8"	7/8"

AVAILABLE OPTIONS FOR HCA SERIES:

Copper tube options:
- ø9.52 mm internally grooved tubes
- ø7 mm internally grooved tubes

Casing options:
- Coated on customer's request

HCA 系列选配件：

铜管：
-Ø9,52 mm内螺纹铜管
-Ø7 mm内螺纹铜管

外壳：
-可按客户要求喷涂

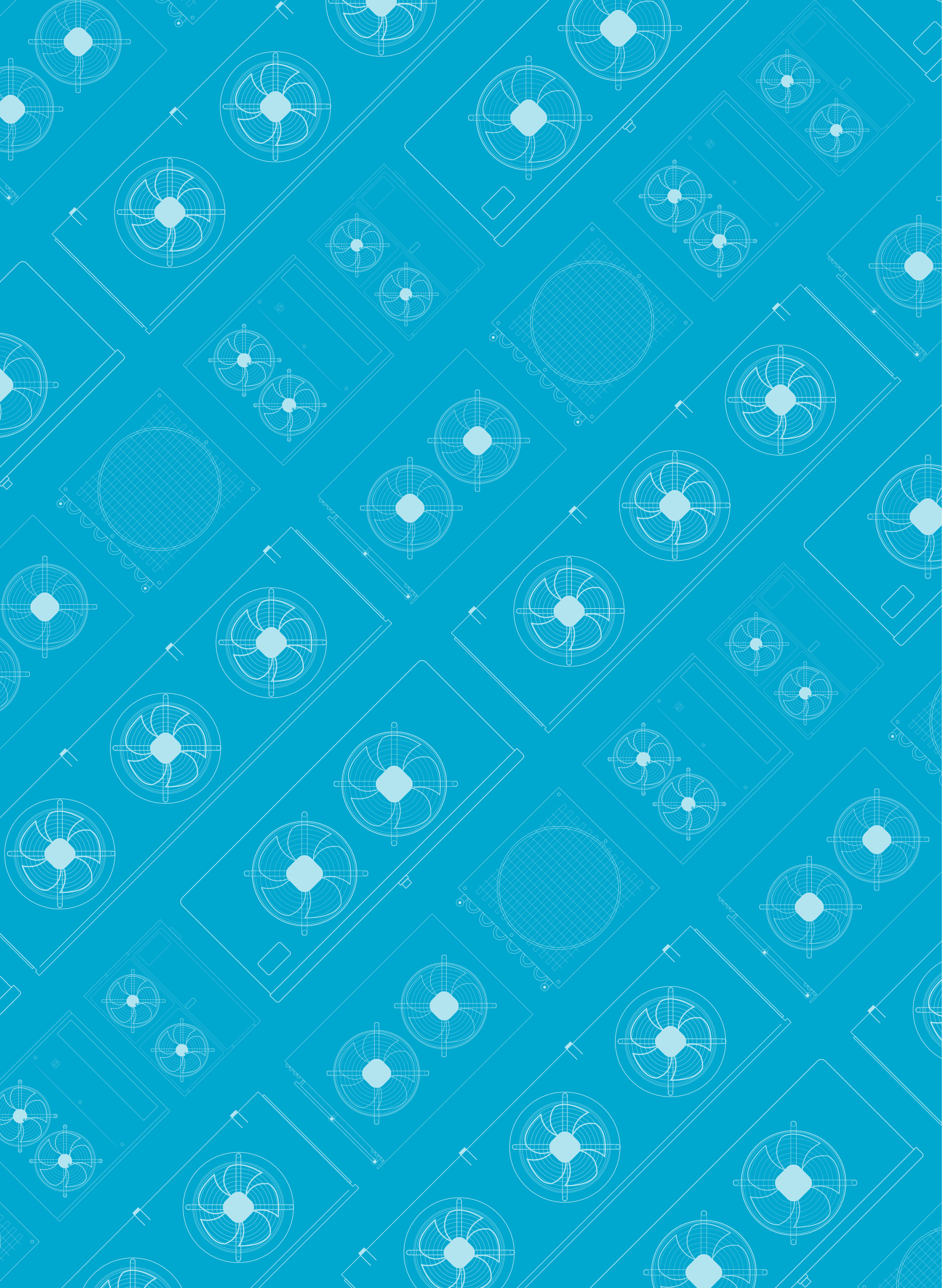

CONDENSERS
CONDENSADORES

The exchange coils used in the HCB range are highly efficient with special profile aluminum fins and ø9.52 mm (HCB) or ø7 mm (HCBS) internally grooved tubes, with a reduced internal volume to reduce the necessary refrigerant charge, meeting the needs of the different international regulations for the reduction of gases with high greenhouse effect. They are supplied clean and tested under a pressure of 30 bar.

Supported to the casing by means of a “floating” system that avoids any kind of contact between the copper tubes and the supporting end plates, assu- ring a long life for the condenser without leaks.

On outdoor units, Blue Fin coating helps protect the parts from corrosion.

HCB SERIES CONDENSERS
冷凝器系列 HCB

HCB的高效内芯采用铝箔和ø9.52mm(HCB)或ø7mm(HCBS)内螺纹铜管，通过减少管容积来降低冷媒充注量，满足全球温室气体的减排需求。所有内芯均经过清洁和30bar保压测试。

外壳采用“悬浮”结构，以避免铜管和侧板板之间产生接触，确保冷凝器的使用寿命长且无泄漏。

在室外设备上，蓝色翅片有助于保护部件免受腐蚀。

The standard electric fans used in this range have the following characteristics:

- ø200 mm: single-phase 230V/1/50 Hz with shade pole motor, with grid and short nozzle. Operating temperature -30ºC to +50ºC.

- ø250, 300, 350, 400 mm: single-phase 230V/1/50 Hz with external rotor, with type K grid and nozzle (short mouth). Operating temperature -40ºC to +50ºC.

-ø450, 500, 630, 710, 800 mm: three-phase 400V/3/50 Hz with external rotor, with type K grid and nozzle (short mouth). Operating temperature -40ºC to +50ºC.

Black galvanized steel casing with high resistance to corrosion and impacts.

For performance at work points other than those in this catalog, use the "Unit Selector Hybrid HISPANIA" software.

For special applications and additional information consult our Technical Department.

标准的风机配置如下：

-ø200mm：单相230V/1/50Hz罩极电机，带网罩和短出风口。工作温度-30ºC至+50ºC。

-ø250，300，350，400 mm：单相230V/1/50Hz外转子电机，带K网罩和短出风口。工作温度-30ºC至+50ºC。

-ø450，500，630，710，800 mm：三相400V/3/50Hz外转子电机，带K网罩和短出风口。工作温度-40ºC至+50ºC。

黑色喷涂的镀锌板外壳，有较高的防腐蚀和抗震性能。

可使用"Unit Selector Hybrid HISPANIA"选型软件查询样册以外的工况性能。

更多需求和信息请联系Hispania。

HCB G - 1HPCD

- Fan number (blank: single, CD: double) / 风机数量 （空白：单风机，CD：多风机）
- Horse power / 匹数
- Refrigerant (blank: Freon, G: glycol)/ 制冷剂（空白：氟利昂，G：乙二醇）
- Series / 系列

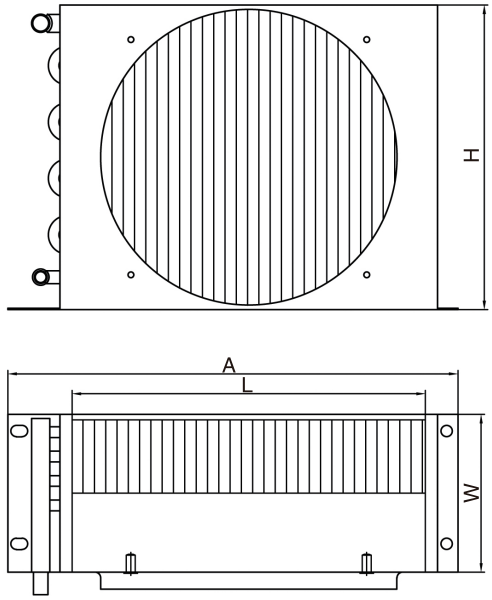
H
A
L
W

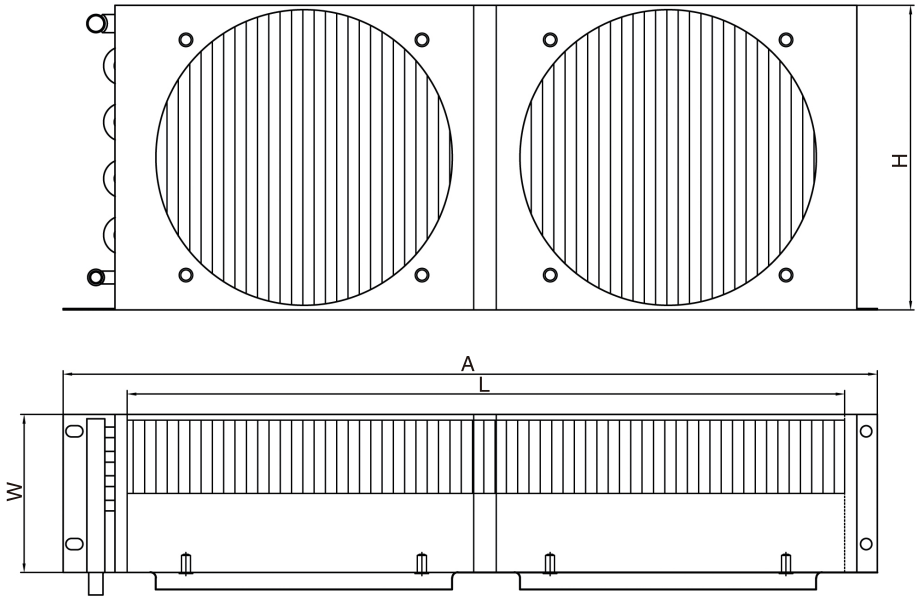
H
A
L
W

Model / 型号	Tubes N° 列数	Capacity / 制冷量 (kW)		Fin Spacing/ 片距 (mm)	Surface/ 面积 (m2)	Ventilator 风机		Dimension 尺寸 (mm)				Connection/ 接口尺寸	
		R404A	R448A/ R449A			N° × ∅ (mm)	Air Flow 风量 (m3/h)	A	H	W	L	Inlet/ 进口	Outlet/ 出口
		DT1=15K	DT1=15K										
HCB-1/4HP	2 × 11	1.38	1.39	3.17	2.2	1 × 250	817	360	281	102	300	3/8"	3/8"
HCB-1/3HP	3 × 10	1.60	1.62	3.17	2.9	1 × 250	657	380	270	120	300	3/8"	3/8"
HCB-1/2HP	4 × 10	1.62	1.64	3.17	3.8	1 × 250	565	380	270	140	290	3/8"	3/8"
HCB-3/4HP	4 × 12	3.08	3.11	3.17	5.5	1 × 300	1123	450	370	152	350	3/8"	3/8"
HCB-1HP	4 × 14	3.77	3.80	3.17	7.3	1 × 300	1289	490	370	152	400	1/2"	3/8"
HCB-1.5HP	4 × 16	6.40	6.46	3.17	10.4	1 × 350	2313	600	422	182	500	1/2"	3/8"
HCB-2HP	4 × 18	8.70	8.81	3.17	14.1	1 × 400	3225	690	473	182	600	1/2"	3/8"
HCB-2.5HP	5 × 18	9.69	9.77	3.17	17.6	1 × 400	3054	710	473	200	600	5/8"	1/2"
HCB-3HP	6 × 18	10.17	10.26	3.17	21.2	1 × 400	2900	710	473	234	600	5/8"	1/2"
HCB-4HP	6 × 22	11.49	11.58	3.17	25.9	1 × 400	3178	710	575	234	600	5/8"	1/2"
HCB-5HP	4 × 30	18.31	18.55	2.83	34.8	1 × 450	6153	910	780	215	800	5/8"	1/2"
HCB-1HPCD	4 x 10	2.23	2.25	3.17	6.5	2 x 200	667	590	270	140	500	3/8"	3/8"
HCB-1.5HPCD	4 x 11	4.21	4.24	3.17	9.5	2 x 250	1334	737	305	140	660	1/2"	3/8"
HCB-2HPCD	4 x 12	6.96	7.02	3.17	12.5	2 x 300	2401	900	370	152	800	1/2"	3/8"
HCB-3HPCD	4 × 16	13.48	13.59	2.83	23.2	2 × 350	4549	1110	420	182	1000	5/8"	1/2"
HCB-4HPCD	4 × 20	15.27	15.41	2.83	29.0	2 × 350	4988	1110	525	182	1000	5/8"	1/2"
HCB-5HPCD	4 × 24	19.25	19.52	2.83	34.8	2 × 400	6603	1110	625	195	1000	5/8"	1/2"
HCB-6HPCD	4 × 26	21.25	21.63	2.83	45.2	2 × 400	7161	1310	680	195	1200	5/8"	1/2"
HCB-7.5HPCD	4 × 32	33.66	34.00	2.83	55.6	2 × 450	11642	1310	830	215	1200	7/8 "	5/8"
HCB-10HPCD	4 × 32	44.80	45.53	2.83	74.2	2 × 500	16249	1710	830	230	1600	1-1/8"	7/8"
HCB-12HPCD	4 × 36	70.73	71.80	2.83	83.4	2 × 630	29531	1710	928	230	1600	1-1/8"	7/8"
HCB-15HPCD	4 × 36	74.98	76.26	2.83	93.9	2 × 630	30927	1910	928	230	1800	1-1/8"	7/8"
HCB-18HPCD	4 × 36	65.44	66.38	2.54	103.2	3 × 500	23823	2090	928	230	1980	1-1/8"	7/8"
HCB-20HPCD	4 × 42	71.87	72.44	2.83	121.7	2 × 710	24329	2110	1075	227	2044	1-3/8"	1-1/8"
HCB-25HPCD	4 × 42	75.07	75.67	2.83	133.8	2 × 710	24873	2310	1075	227	2200	1-3/8"	1-1/8"
HCB-30HPCD	5 × 42	82.11	82.83	2.83	167.3	2 × 710	24106	2310	1075	227	2200	1-5/8"	1-3/8"
HCB-35HPCD	5 × 48	123.28	124.17	2.54	240.0	2 × 800	35834	2580	1230	350	2500	1-5/8"	1-3/8"
HCB-40HPCD	6 × 48	127.83	128.76	2.54	288.0	2 × 800	34602	2580	1230	350	2500	1-5/8"	1-3/8"
HCB-45HPCD	5 × 48	182.68	184.60	2.54	360.0	3 × 800	53751	3830	1230	350	3750	2-1/8"	1-5/8"
HCB-50HPCD	6 × 48	195.47	196.64	2.54	432.0	3 × 800	51903	3830	1230	350	3750	2-5/8"	2-1/8"

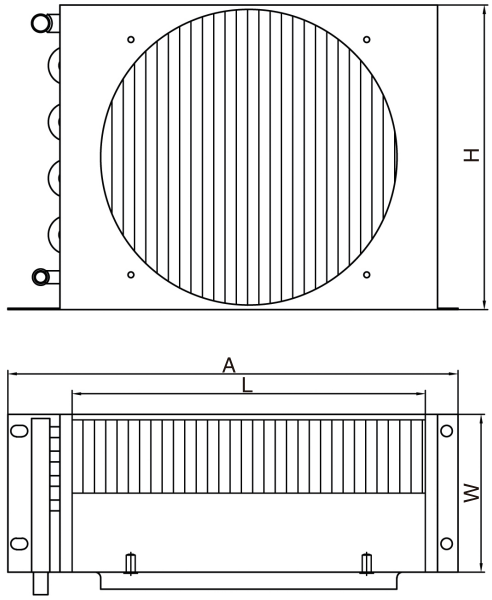
H
A
L
W

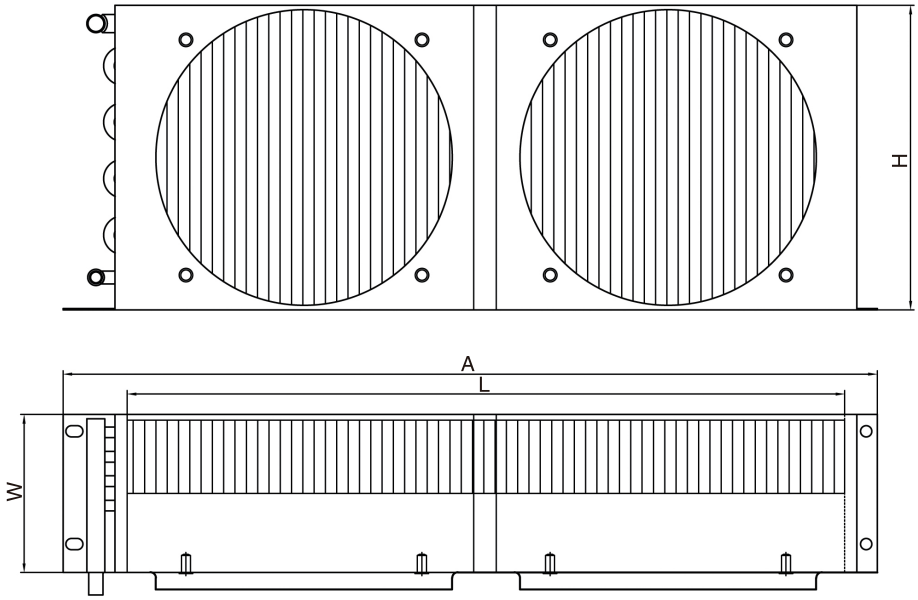
H
A
L
W

Model / 型号	Tubes N° 列数	Capacity / 制冷量 (kW)		Fin Spacing/ 片距 (mm)	Surface/ 面积 (m2)	Ventilator 风机		Dimension 尺寸 (mm)				Connection/ 接口尺寸	
		R404A	R448A/ R449A			N° × ∅ (mm)	Air Flow 风量 (m3/h)	A	H	W	L	Inlet/ 进口	Outlet/ 出口
		DT1=15K	DT1=15K										
HCBS-1/4HP	2 × 11	1.27	1.28	3.17	2.2	1 × 250	775	360	281	102	300	3/8"	3/8"
HCBS-1/3HP	3 × 10	1.45	1.46	3.17	3.1	1 × 250	609	380	270	120	300	3/8"	3/8"
HCBS-1/2HP	4 × 10	1.51	1.52	3.17	3.9	1 × 250	525	380	270	140	290	3/8"	3/8"
HCBS-3/4HP	4 × 12	2.81	2.84	3.17	5.7	1 × 300	1053	450	370	152	350	3/8"	3/8"
HCBS-1HP	4 × 14	3.44	3.47	3.17	7.6	1 × 300	1231	490	370	152	400	1/2"	3/8"
HCBS-1.5HP	4 × 16	5.52	5.61	3.17	10.9	1 × 350	2216	600	422	182	500	1/2"	3/8"
HCBS-2HP	4 × 18	6.95	7.16	3.17	14.7	1 × 400	3097	690	473	182	600	1/2"	3/8"
HCBS-2.5HP	5 × 18	8.30	8.45	3.17	18.3	1 × 400	2909	710	473	200	600	5/8"	1/2"
HCBS-3HP	6 × 18	9.28	9.35	3.17	22.0	1 × 400	2752	710	473	234	600	5/8"	1/2"
HCBS-4HP	6 × 22	10.49	10.58	3.17	26.9	1 × 400	3042	710	575	234	600	5/8"	1/2"
HCBS-5HP	4 × 30	14.56	15.05	2.83	36.2	1 × 450	6010	910	780	215	800	5/8"	1/2"
HCBS-1HPCD	4 x 10	2.05	2.07	3.17	6.8	2 x 200	624	590	270	140	500	3/8"	3/8"
HCBS-1.5HPCD	4 x 11	3.73	3.76	3.17	9.9	2 x 250	1236	737	305	140	660	1/2"	3/8"
HCBS-2HPCD	4 x 12	5.89	6.00	3.17	13.0	2 x 300	2282	900	370	152	800	1/2"	3/8"
HCBS-3HPCD	4 × 16	11.73	11.92	2.83	24.1	2 × 350	4355	1110	420	182	1000	5/8"	1/2"
HCBS-4HPCD	4 × 20	12.87	13.15	2.83	30.2	2 × 350	4786	1110	525	182	1000	5/8"	1/2"
HCBS-5HPCD	4 × 24	17.86	18.04	2.83	36.2	2 × 400	6360	1110	625	195	1000	5/8"	1/2"
HCBS-6HPCD	4 × 26	20.69	20.85	2.83	47.1	2 × 400	6956	1310	680	195	1200	5/8"	1/2"
HCBS-7.5HPCD	4 × 32	30.77	31.03	2.83	58.0	2 × 450	11287	1310	830	215	1200	7/8 "	5/8"
HCBS-10HPCD	4 × 32	41.93	42.42	2.83	77.3	2 × 500	15742	1710	830	230	1600	1-1/8"	7/8"
HCBS-12HPCD	4 × 36	62.23	63.29	2.83	86.9	2 × 630	28264	1710	928	230	1600	1-1/8"	7/8"
HCBS-15HPCD	4 × 36	66.10	67.36	2.83	97.8	2 × 630	29722	1910	928	230	1800	1-1/8"	7/8"
HCBS-18HPCD	4 × 36	58.58	59.58	2.54	107.6	3 × 500	23021	2090	928	230	1980	1-1/8"	7/8"
HCBS-20HPCD	4 × 42	63.54	64.52	2.83	126.8	2 × 710	23687	2110	1075	227	2044	1-3/8"	1-1/8"
HCBS-25HPCD	4 × 42	65.85	66.98	2.83	139.5	2 × 710	24289	2310	1075	227	2200	1-3/8"	1-1/8"
HCBS-30HPCD	5 × 42	69.77	71.32	2.83	174.3	2 × 710	23440	2310	1075	227	2200	1-5/8"	1-3/8"
HCBS-35HPCD	5 × 48	110.42	111.90	2.54	250.7	2 × 800	34682	2580	1230	350	2500	1-5/8"	1-3/8"
HCBS-40HPCD	6 × 48	119.27	120.13	2.54	300.9	2 × 800	33053	2580	1230	350	2500	1-5/8"	1-3/8"
HCBS-45HPCD	5 × 48	149.32	153.44	2.54	376.1	3 × 800	52023	3830	1230	350	3750	2-1/8"	1-5/8"
HCBS-50HPCD	6 × 48	176.23	178.15	2.54	451.3	3 × 800	49580	3830	1230	350	3750	2-5/8"	2-1/8"

AVAILABLE OPTIONS FOR HCB SERIES:

Copper tube options:
- ø9.52 mm internally grooved tubes
- ø7 mm internally grooved tubes

Casing options:
- Coated on customer's request

HCB 系列选配件：

铜管：
-Ø9,52 mm内螺纹铜管
-Ø7 mm内螺纹铜管

外壳：
-可按客户要求喷涂

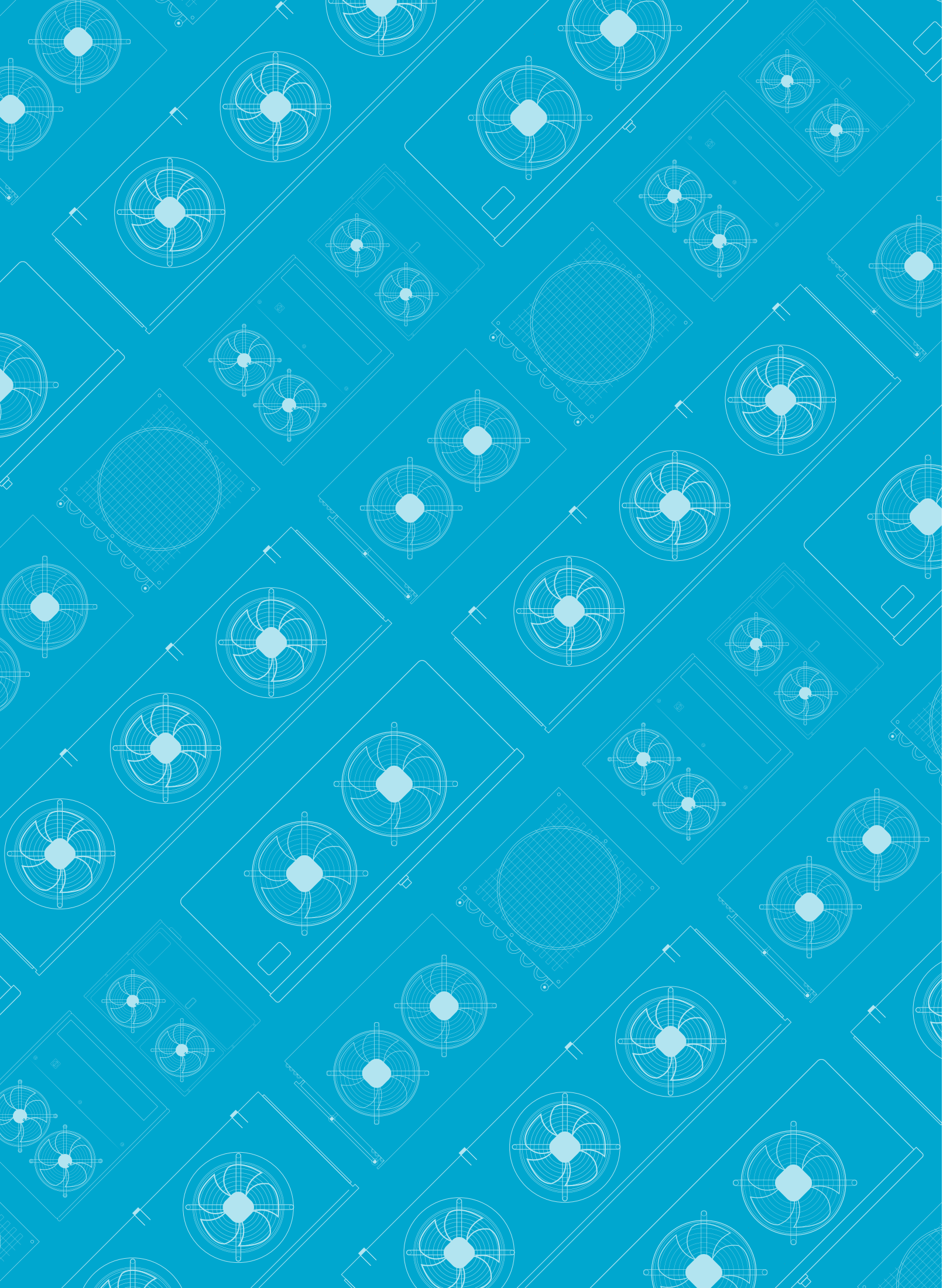

CONDENSERS
CONDENSADORES

The exchange coils used in the HCV range are highly efficient with special profile aluminum fins and ø9.52 mm internally grooved tubes. They are supplied clean and tested under a pressure of 30 bar.

Supported to the casing by means of a “floating” system that avoids any kind of contact between the copper tubes and the supporting end plates, assu- ring a long life for the condenser without leaks.

On outdoor units, Blue Fin coating helps protect the parts from corrosion.

HCV SERIES CONDENSERS
冷凝器系列 HCV

HCV的高效内芯采用铝箔和ø9.52mm内螺纹铜管。所有内芯均经过清洁和30bar保压测试。

外壳采用“悬浮”结构，以避免铜管和侧板板之间产生接触，确保冷凝器的使用寿命长且无泄漏。

在室外设备上，蓝色翅片有助于保护部件免受腐蚀。

The standard electric fans used in this range have the following characteristics:

-ø500, 630 mm: three-phase 400V/3/50 Hz with external rotor, with L-type grille and nozzle (long mouth). Operating temperature -40ºC to +50ºC.

-ø800 mm: three-phase 400V/3/50 Hz with external rotor, with ZN-type grille and nozzle (long mouth). Operating temperature -40ºC to +50ºC.

White coated galvanized steel casing with high resistance to corrosion and impacts.

For performance at work points other than those in this catalog, use the “Unit Selector Hybrid HISPANIA” software.

For special applications and additional information consult our Technical Department.

标准的风机配置如下：

-ø500，630 mm：三相400V/3/50Hz外转子电机，带L网罩和长出风口。工作温度-40ºC至+50ºC。

-ø630，800 mm：三相400V/3/50Hz外转子电机，带ZN网罩和长风口. 工作温度-40ºC至+50ºC。

白色喷涂的镀锌板外壳，有较高的防腐蚀和抗震性能。

可使用“Unit Selector Hybrid HISPANIA”选型软件查询样册以外的工况性能。

更多需求和信息请联系Hispania。

HCV G 6303-309-4D

- Connection (D: Delta, S: Star) / 接线（D：三角形，S：星形）
- Fan poles /风机极数
- Surface (m2) / 面积
- Fan number/风机数量
- Fan ø (mm) / 风机直径(mm)
- Refrigerant (blank: Freon, G: glycol)/制冷剂（空白：氟利昂，G：乙二醇）
- Series / 系列

CONDENSERS
冷凝器

Model / 型号	Dimensions / 尺寸 (mm)					
	A	B	C	D	E	H
HCV 5002...	1446	781	1320	1350	720	859
HCV 5003...	2121	781	1995	2025	720	859
HCV 5004...	2796	781	2670	2700	720	859
HCV 5005...	3471	781	3345	3375	720	859
HCV 5006...	4146	781	4020	4050	720	859
HCV 6302...	1694	912	1500	1540	865	1210
HCV 6303...	2464	912	2270	2310	865	1210
HCV 6304...	3234	912	3040	1540	865	1210
HCV 6305...	4004	912	3810	2310	865	1210
HCV 6306...	4774	912	4580	3080	865	1210
HCV 8002...	2256	1150	2070	2100	1113	1435
HCV 8003...	3306	1150	3120	3150	1113	1435
HCV 8004...	4356	1150	4170	2100	1113	1435
HCV 8005...	5406	1150	5220	3150	1113	1435
HCV 8006...	6456	1150	6270	4200	1113	1435

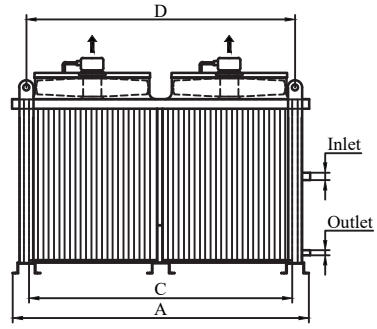

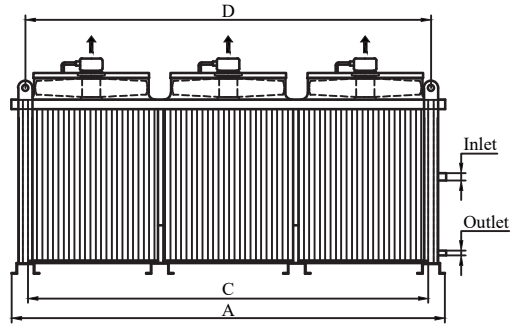

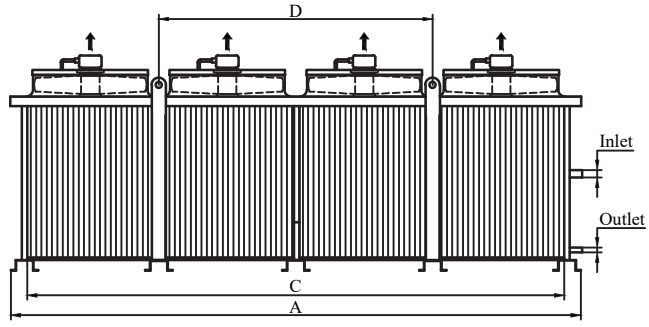

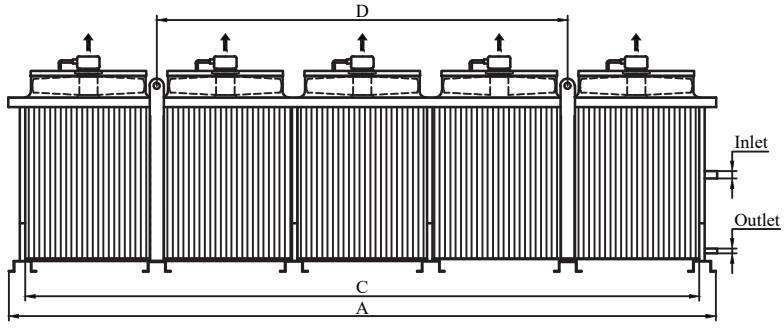

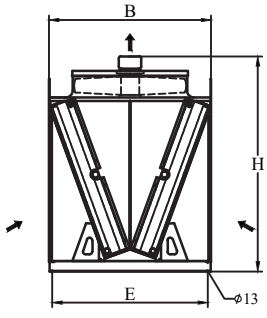

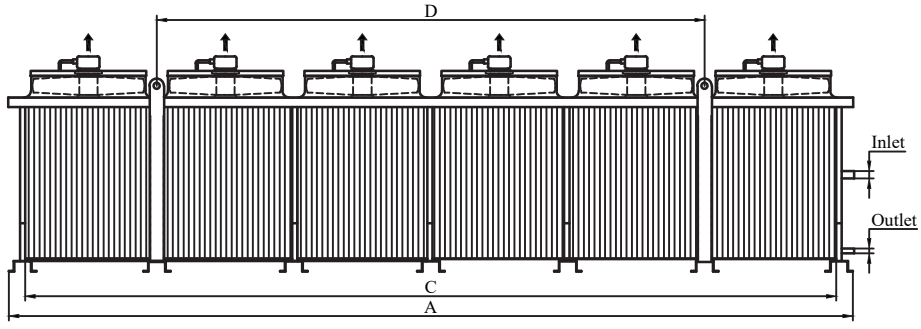

Model / 型号	Capacity / 制冷量 (kW)		Sound Pressure Level/ 声压	Fin Spacing/ 片距 (mm)	Surface/ 面积 (m2)	Volumen Interno/ 管容积 (dm3)	Ventilator 风机					Connec-tion/ 接口尺寸 (ø mm)		N.W/ 净重 (kg)
	R404A	R448A/ R449A	距离 =10m				N° × ∅ (mm)	Pole connection 极数 接线	Power/ 功率 (W)	Current/ 电流 (A)	Air Flow/ 风量 (m3/h)	Inlet/ 进口	Outlet/ 出口	
	DT1=15K	DT1=15K	dBA											
HCV 5002 121-4D	51.32	51.71	54	2.1	121.0	16.0	2 × 630	4P-Δ	1300	2.3	14583	2×28	2×22	161
HCV 5002 151-4D	55.18	55.51	54	2.1	151.3	20.0	2 × 630	4P-Δ	1300	2.3	14168	2×28	2×22	161
HCV 5003 182-4D	77.27	77.83	55	2.1	182.9	24.2	3 × 630	4P-Δ	1950	3.5	21889	2×28	2×22	233
HCV 5003 227-4D	83.08	83.57	55	2.1	228.7	30.2	3 × 630	4P-Δ	1950	3.5	21283	2×28	2×22	233
HCV 5004 242-4D	102.29	103.27	60	2.1	244.8	32.3	4 × 630	4P-Δ	2600	4.6	29209	2×35	2×28	304
HCV 5004 303-4D	110.35	111.2	60	2.1	306.0	40.4	4 × 630	4P-Δ	2600	4.6	28399	2×35	2×28	304
HCV 5005 303-4D	128.62	129.71	62	2.1	306.7	40.5	5 × 630	4P-Δ	3250	5.8	36529	2×35	2×28	374
HCV 5005 378-4D	138.53	139.51	62	2.1	383.4	50.6	5 × 630	4P-Δ	3250	5.8	35514	2×35	2×28	374
HCV 5006 363-4D	155.21	156.32	65	2.1	368.6	48.7	6 × 630	4P-Δ	3900	6.9	43849	2×35	2×28	445
HCV 5006 454-4D	166.38	167.55	65	2.1	460.8	60.8	6 × 630	4P-Δ	3900	6.9	42630	2×35	2×28	445

Model / 型号	Capacity / 制冷量 (kW)		Sound Pressure Level/ 声压	Fin Spacing/ 片距 (mm)	Surface/ 面积 (m2)	Volumen Interno/ 管容积 (dm3)	Ventilator 风机					Connec-tion/ 接口尺寸 (ø mm)		N.W/ 净重 (kg)
	R404A	R448A/ R449A	距离 =10m				N° × Ø (mm)	Pole connection 极数 接线	Power/ 功率 (W)	Current/ 电流 (A)	Air Flow/ 风量 (m3/h)	Inlet/ 进口	Outlet/ 出口	
	DT1=15K	DT1=15K	dBA											
HCV 6302 206-4D	86.07	86.75	55	2.1	206.3	27.2	2 × 630	4P-Δ	2200	4.4	24362	2×28	2×22	242
HCV 6302 206-4S	70.34	70.8	52	2.1	206.3	27.2	2 × 630	4P-Y	1300	2.5	18712	2×28	2×22	242
HCV 6302 206-6D	76.91	77.45	48	2.1	206.3	27.2	2 × 630	6P-Δ	1452	3.5	20995	2×28	2×22	242
HCV 6302 206-6S	67.69	68.07	45	2.1	206.3	27.2	2 × 630	6P-Y	1114	1.9	17817	2×28	2×22	242
HCV 6302 258-4D	93.42	94.05	55	2.1	257.9	34.0	2 × 630	4P-Δ	2200	4.4	23954	2×28	2×22	261
HCV 6302 258-4S	74.55	74.91	52	2.1	257.9	34.0	2 × 630	4P-Y	1300	2.5	18144	2×28	2×22	261
HCV 6302 258-6D	82.08	82.52	48	2.1	257.9	34.0	2 × 630	6P-Δ	1452	3.5	20396	2×28	2×22	261
HCV 6302 258-6S	71.49	71.86	45	2.1	257.9	34.0	2 × 630	6P-Y	1114	1.9	17267	2×28	2×22	261
HCV 6303 309-4D	129.31	130.31	56	2.1	309.5	40.9	3 × 630	4P-Δ	3300	6.6	36543	2×35	2×22	349
HCV 6303 309-4S	105.63	106.3	53	2.1	309.5	40.9	3 × 630	4P-Y	1950	3.8	28068	2×35	2×22	349
HCV 6303 309-6D	115.51	116.31	49	2.1	309.5	40.9	3 × 630	6P-Δ	2178	5.2	31492	2×35	2×22	349
HCV 6303 309-6S	101.63	102.25	46	2.1	309.5	40.9	3 × 630	6P-Y	1671	2.9	26726	2×35	2×22	349
HCV 6303 387-4D	139.02	140.2	56	2.1	386.9	51.1	3 × 630	4P-Δ	3300	6.6	35930	2×35	2×22	377
HCV 6303 387-4S	111.43	112.14	53	2.1	386.9	51.1	3 × 630	4P-Y	1950	3.8	27216	2×35	2×22	377
HCV 6303 387-6D	122.5	123.37	49	2.1	386.9	51.1	3 × 630	6P-Δ	2178	5.2	30593	2×35	2×22	377
HCV 6303 387-6S	106.98	107.63	46	2.1	386.9	51.1	3 × 630	6P-Y	1671	2.9	25900	2×35	2×22	377
HCV 6304 415-4D	172.89	174.21	64	2.1	415.4	54.8	4 × 630	4P-Δ	4400	8.8	48754	2×42	2×28	456
HCV 6304 415-4S	141.28	142.17	61	2.1	415.4	54.8	4 × 630	4P-Y	2600	5.0	37479	2×42	2×28	456
HCV 6304 415-6D	154.49	155.55	57	2.1	415.4	54.8	4 × 630	6P-Δ	2904	7.0	42045	2×42	2×28	456
HCV 6304 415-6S	135.92	136.75	54	2.1	415.4	54.8	4 × 630	6P-Y	2228	3.9	35686	2×42	2×28	456
HCV 6304 519-4D	187.61	188.84	64	2.1	519.2	68.6	4 × 630	4P-Δ	4400	8.8	47964	2×42	2×28	493
HCV 6304 519-4S	149.63	150.35	61	2.1	519.2	68.6	4 × 630	4P-Y	2600	5.0	36343	2×42	2×28	493
HCV 6304 519-6D	164.81	165.68	57	2.1	519.2	68.6	4 × 630	6P-Δ	2904	7.0	40854	2×42	2×28	493
HCV 6304 519-6S	143.52	144.24	54	2.1	519.2	68.6	4 × 630	6P-Y	2228	3.9	34591	2×42	2×28	493
HCV 6305 521-4D	213.85	216.02	65	2.1	521.3	68.8	5 × 630	4P-Δ	5500	11.0	60965	2×54	2×35	561
HCV 6305 521-4S	175.81	177.16	62	2.1	521.3	68.8	5 × 630	4P-Y	3250	6.3	46890	2×54	2×35	561
HCV 6305 521-6D	191.81	193.48	58	2.1	521.3	68.8	5 × 630	6P-Δ	3630	8.7	52598	2×54	2×35	561
HCV 6305 521-6S	169.28	170.52	55	2.1	521.3	68.8	5 × 630	6P-Y	2785	4.9	44646	2×54	2×35	561
HCV 6305 652-4D	232.86	234.79	65	2.1	651.6	86.0	5 × 630	4P-Δ	5500	11.0	59997	2×54	2×35	607
HCV 6305 652-4S	186.6	187.76	62	2.1	651.6	86.0	5 × 630	4P-Y	3250	6.3	45469	2×54	2×35	607
HCV 6305 652-6D	205.2	206.62	58	2.1	651.6	86.0	5 × 630	6P-Δ	3630	8.7	51115	2×54	2×35	607
HCV 6305 652-6S	179.18	180.24	55	2.1	651.6	86.0	5 × 630	6P-Y	2785	4.9	43282	2×54	2×35	607
HCV 6306 627-4D	260.06	262.02	66	2.1	627.2	82.8	6 × 630	4P-Δ	6600	13.2	73176	2×54	2×35	667
HCV 6306 627-4S	212.57	213.9	63	2.1	627.2	82.8	6 × 630	4P-Y	3900	7.5	56300	2×54	2×35	667
HCV 6306 627-6D	232.47	234.04	59	2.1	627.2	82.8	6 × 630	6P-Δ	4356	10.4	63151	2×54	2×35	667
HCV 6306 627-6S	204.5	205.73	56	2.1	627.2	82.8	6 × 630	6P-Y	3342	5.8	53606	2×54	2×35	667
HCV 6306 784-4D	282.23	284.03	66	2.1	784.0	103.5	6 × 630	4P-Δ	6600	13.2	72029	2×54	2×35	722
HCV 6306 784-4S	225.08	226.15	63	2.1	784.0	103.5	6 × 630	4P-Y	3900	7.5	54596	2×54	2×35	722
HCV 6306 784-6D	247.95	249.24	59	2.1	784.0	103.5	6 × 630	6P-Δ	4356	10.4	61376	2×54	2×35	722
HCV 6306 784-6S	215.9	216.98	56	2.1	784.0	103.5	6 × 630	6P-Y	3342	5.8	51973	2×54	2×35	722

Model / 型号	Capacity / 制冷量 (kW)		Sound Pressure Level/ 声压	Fin Spacing/ 片距 (mm)	Surface/ 面积 (m2)	Volumen Interno/ 管容积 (dm3)	Ventilator 风机					Connec-tion/ 接口尺寸 (ø mm)		N.W/ 净重 (kg)
	R404A	R448A/ R449A	距离 =10m				N° × Ø (mm)	Pole connection 极数 接线	Power/ 功率 (W)	Current/ 电流 (A)	Air Flow/ 风量 (m3/h)	Inlet/ 进口	Outlet/ 出口	
	DT1=15K	DT1=15K	dBA											
HCV 8002 358-6D	140.57	141.62	51	2.1	332.2	43.9	2 × 800	6P-Δ	3200	7.0	39845	2×42	2×28	358
HCV 8002 358-6S	109.11	109.72	42	2.1	332.2	43.9	2 × 800	6P-Y	1600	3.1	28711	2×42	2×28	358
HCV 8002 448-6D	150.81	151.96	51	2.1	415.2	54.8	2 × 800	6P-Δ	3200	7.0	38857	2×42	2×28	387
HCV 8002 448-6S	114.93	115.51	42	2.1	415.2	54.8	2 × 800	6P-Y	1600	3.1	27756	2×42	2×28	387
HCV 8003 538-6D	211	212.68	53	2.1	500.7	66.1	3 × 800	6P-Δ	4800	10.5	59816	2×54	2×35	520
HCV 8003 538-6S	164.12	165.13	44	2.1	500.7	66.1	3 × 800	6P-Y	2400	4.7	43116	2×54	2×35	520
HCV 8003 673-6D	227.69	229.22	53	2.1	625.8	82.6	3 × 800	6P-Δ	4800	10.5	58347	2×54	2×35	564
HCV 8003 673-6S	173.05	173.86	44	2.1	625.8	82.6	3 × 800	6P-Y	2400	4.7	41689	2×54	2×35	564
HCV 8004 721-6D	282.29	284.34	54	2.1	669.2	88.3	4 × 800	6P-Δ	6400	14.0	79787	2×54	2×35	677
HCV 8004 721-6S	219.05	220.25	45	2.1	669.2	88.3	4 × 800	6P-Y	3200	6.2	57520	2×54	2×35	677
HCV 8004 901-6D	298.92	301.89	54	2.1	836.5	110.4	4 × 800	6P-Δ	6400	14.0	77838	2×54	2×35	736
HCV 8004 901-6S	229.24	230.77	45	2.1	836.5	110.4	4 × 800	6P-Y	3200	6.2	55622	2×54	2×35	736
HCV 8005 902-6D	350.8	353.93	55	2.1	837.7	110.6	5 × 800	6P-Δ	8000	17.5	99759	2×67	2×42	834
HCV 8005 902-6S	273.62	275.43	46	2.1	837.7	110.6	5 × 800	6P-Y	4000	7.8	71924	2×67	2×42	834
HCV 8005 1128-6D	379.08	381.85	55	2.1	1047.1	138.2	5 × 800	6P-Δ	8000	17.5	97328	2×67	2×42	908
HCV 8005 1128-6S	288.73	290.13	46	2.1	1047.1	138.2	5 × 800	6P-Y	4000	7.8	69555	2×67	2×42	908
HCV 8006 1084-6D	414.01	419.01	56	2.1	1006.2	132.8	6 × 800	6P-Δ	9600	21.0	119730	2×67	2×42	992
HCV 8006 1084-6S	325.44	328.19	47	2.1	1006.2	132.8	6 × 800	6P-Y	4800	9.3	86328	2×67	2×42	992
HCV 8006 1355-6D	449.21	453.61	56	2.1	1257.7	166.0	6 × 800	6P-Δ	9600	21.0	116818	2×67	2×42	1081
HCV 8006 1355-6S	344.39	346.66	47	2.1	1257.7	166.0	6 × 800	6P-Y	4800	9.3	83487	2×67	2×42	1081

AVAILABLE OPTIONS FOR HCV SERIES:

Casing options:
- Coated on customer's request

HCV 系列选配件：

外壳：
-可按客户要求喷涂

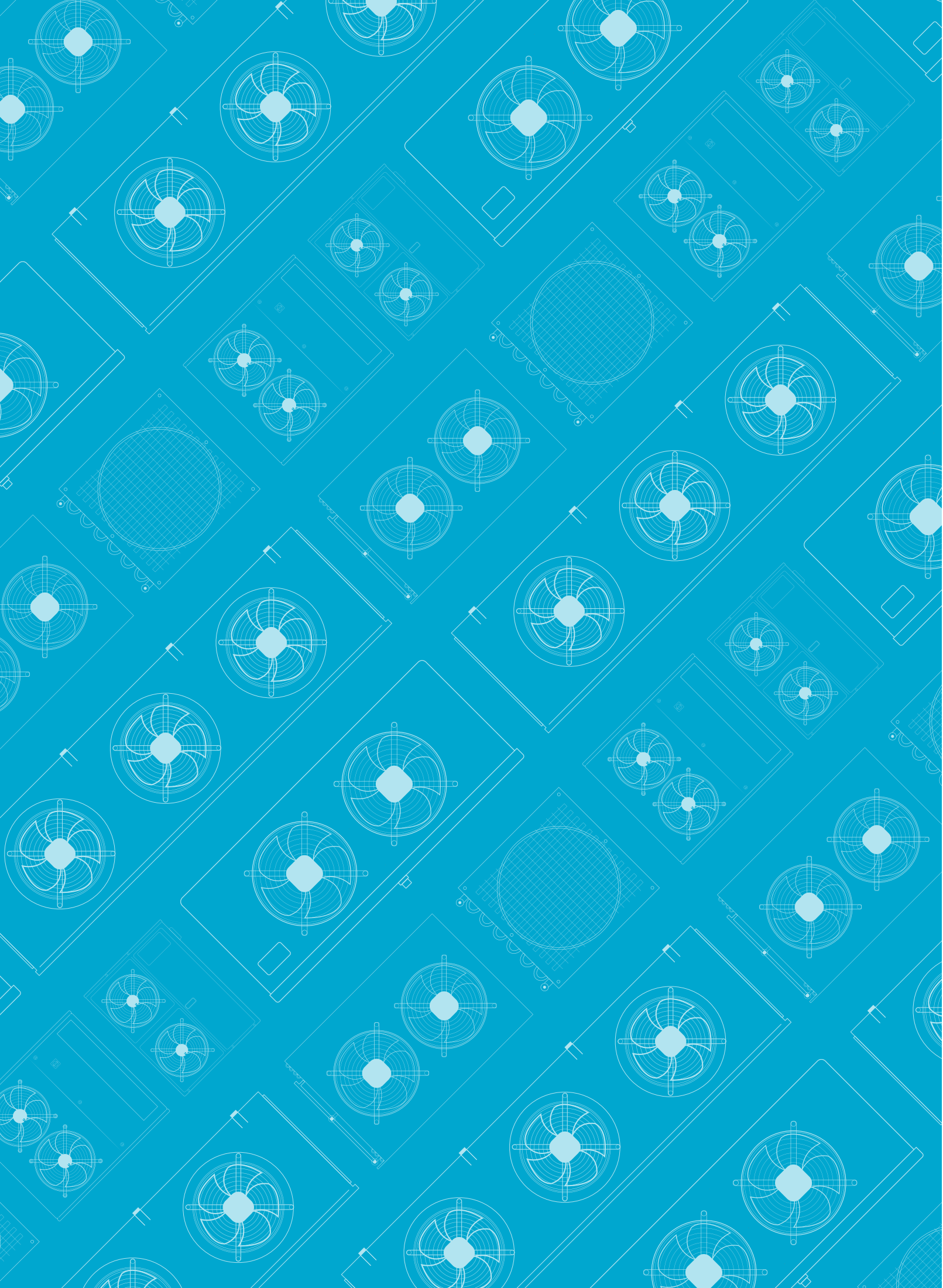

CONDENSERS
CONDENSADORES

The exchange coils used in the HCH range are highly efficient with special profile aluminum fins and ø9.52 mm internally grooved tubes, with a reduced internal volume to reduce the necessary refrigerant charge, meeting the needs of the different international regulations for the reduction of gases with high greenhouse effect. They are supplied clean and tested under a pressure of 30 bar.

Supported to the casing by means of a “floating” system that avoids any kind of contact between the copper tubes and the supporting end plates, assu- ring a long life for the condenser without leaks.

On outdoor units, Blue Fin coating helps protect the parts from corrosion.

HCH SERIES CONDENSERS
冷凝器系列 HCH

HCH的高效内芯采用铝箔和ø9.52mm内螺纹铜管。所有内芯均经过清洁和30bar保压测试。

外壳采用“悬浮”结构，以避免铜管和侧板板之间产生接触，确保冷凝器的使用寿命长且无泄漏。

在室外设备上，蓝色翅片有助于保护部件免受腐蚀。

The standard electric fans used in this range have the following characteristics:

-ø630 mm: three-phase 400V/3/50 Hz with external rotor, with L-type grille and nozzle (long mouth). Operating temperature -40ºC to +50ºC.

-ø800 mm: three-phase 400V/3/50 Hz with external rotor, with ZN-type grille and nozzle (long mouth). Operating temperature -40ºC to +50ºC.

White coated galvanized steel casing with high resistance to corrosion and impacts.

For performance at work points other than those in this catalog, use the “Unit Selector Hybrid HISPANIA” software.

For special applications and additional information consult our Technical Department.

标准的风机配置如下：

-ø630 mm：三相400V/3/50Hz外转子电机，带L网罩和长出风口。工作温度-40ºC至+50ºC。

-ø800 mm：三相400V/3/50Hz外转子电机，带ZN网罩和长风口. 工作温度-40ºC至+50ºC。

白色喷涂的镀锌板外壳，有较高的防腐蚀和抗震性能。

可使用“Unit Selector Hybrid HISPANIA”选型软件查询样册以外的工况性能。

更多需求和信息请联系Hispania。

HCH G 6303-166-4D

- Connection (D: Delta, S: Star) / 接线（D：三角形，S：星形）
- Fan poles /风机极数
- Surface (m2) / 面积
- Fan number/风机数量
- Fan ø (mm) / 风机直径(mm)
- Refrigerant (blank: Freon, G: glycol)/制冷剂（空白：氟利昂，G：乙二醇）
- Series / 系列

CONDENSERS
冷凝器

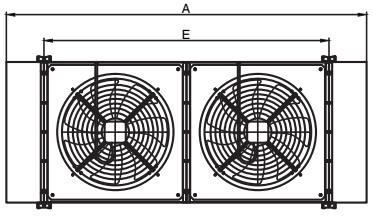

HCH 6302
HCH 8002

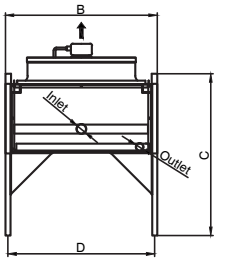

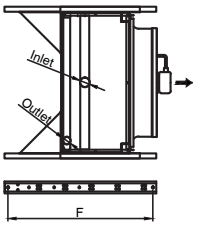

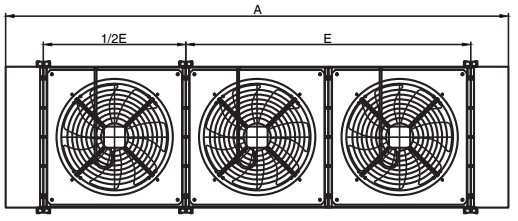

HCH 6303
HCH 8003

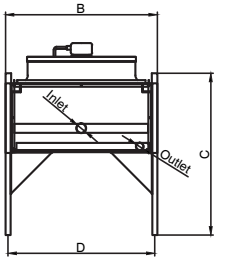

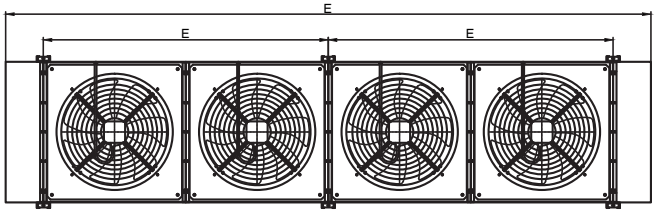

HCH 6304
HCH 8004

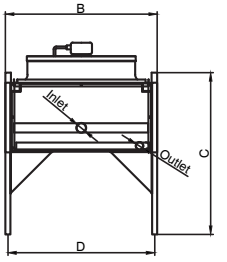

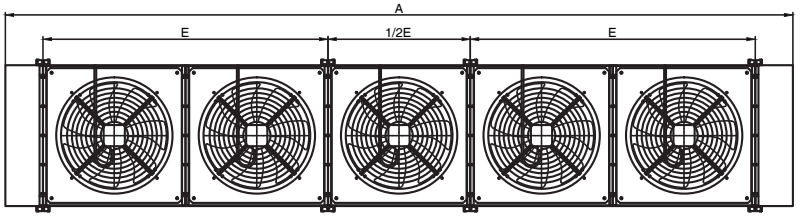

HCH 6305
HCH 8005

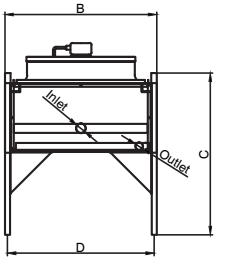

Model / 型号	Dimensions / 尺寸 (mm)					
	A	B	C	D	E	F
HCH 6302…	2150	906	965	884	1700	865
HCH 6303…	3000	906	965	884	1700	865
HCH 6304…	3850	906	965	884	1700	865
HCH 6305…	4700	906	965	884	1700	865
HCH 8002…	2610	1206	1030	1182	2200	938
HCH 8003…	3710	1206	1030	1182	2200	938
HCH 8004…	4810	1206	1030	1182	2200	938
HCH 8005…	5910	1206	1030	1182	2200	938

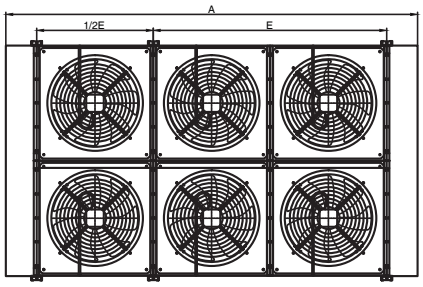

HCH 6306
HCH 8006

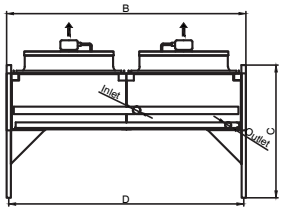

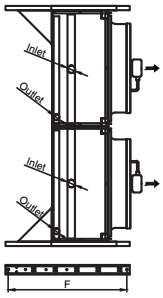

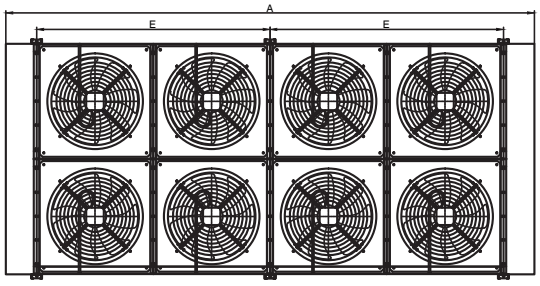

HCH 6308
HCH 8008

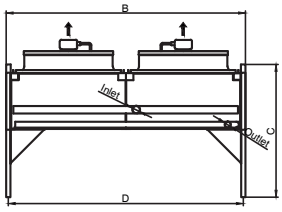

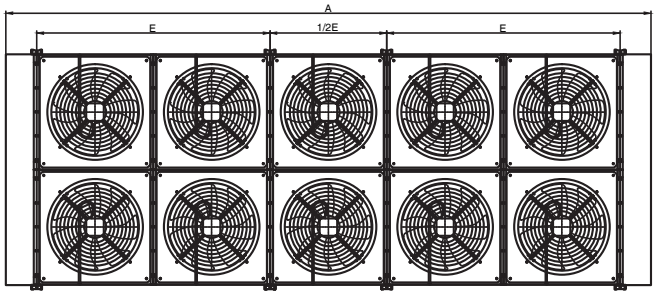

HCH 63010
HCH 80010

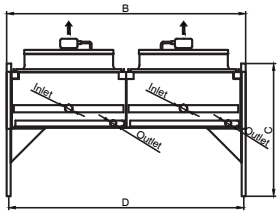

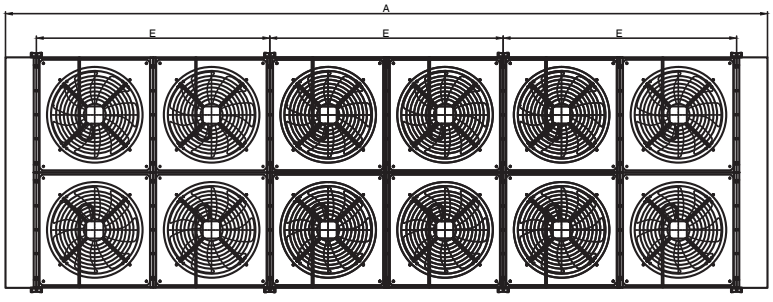

HCH 63012

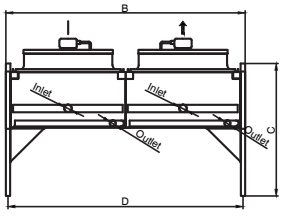

Model / 型号	Dimensions / 尺寸 (mm)					
	A	B	C	D	E	F
HCH 6306…	3000	1746	965	1724	1700	865
HCH 6308…	3850	1746	965	1724	1700	865
HCH 63010…	4700	1746	965	1724	1700	865
HCH 63012…	5550	1746	965	1724	1700	865
HCH 8006…	3710	2346	1030	2322	2200	938
HCH 8008…	4810	2346	1030	2322	2200	938
HCH 80010…	5910	2346	1030	2322	2200	938

Model / 型号	Capacity / 制冷量 (kW)		Sound Pressure Level/ 声压	Fin Spacing/ 片距 (mm)	Surface/ 面积 (m2)	Volumen Interno/ 管容积 (dm3)	Ventilator 风机					Connec-tion/ 接口尺寸 (ø mm)		N.W/ 净重 (kg)
	R404A	R448A/ R449A	距离 =10m				N° × Ø (mm)	Pole connection 极数 接线	Power/ 功率 (W)	Current/ 电流 (A)	Air Flow/ 风量 (m3/h)	Inlet/ 进口	Outlet/ 出口	
	DT1=15K	DT1=15K	dBA											
HCH 6302 110-4D	80.2	81.14	59	2.1	101.5	13.4	2×630	4P-Δ	5400	10.0	29903	35	22	210
HCH 6302 110-4S	67.59	68.27	54	2.1	101.5	13.4	2×630	4P-Y	3500	5.8	23013	35	22	210
HCH 6302 164-4D	92.2	93.03	59	2.1	152.2	20.1	2×630	4P-Δ	5400	10.0	26409	35	22	228
HCH 6302 164-4S	75.08	75.65	54	2.1	152.2	20.1	2×630	4P-Y	3500	5.8	20100	35	22	228
HCH 6303 166-4D	120.15	121.45	61	2.1	153.4	20.3	3×630	4P-Δ	8100	15.0	44991	42	28	303
HCH 6303 166-4S	100.91	101.9	56	2.1	153.4	20.3	3×630	4P-Y	5250	8.7	34665	42	28	303
HCH 6303 248-4D	139.19	140.51	61	2.1	230.2	30.4	3×630	4P-Δ	8100	15.0	39819	42	28	331
HCH 6303 248-4S	113.49	114.38	56	2.1	230.2	30.4	3×630	4P-Y	5250	8.7	30295	42	28	331
HCH 6304 222-4D	162	163.84	62	2.1	205.4	27.1	4×630	4P-Δ	10800	20.0	60078	54	35	379
HCH 6304 222-4S	136.57	137.91	57	2.1	205.4	27.1	4×630	4P-Y	7000	11.6	46315	54	35	379
HCH 6304 333-4D	186.4	188.04	62	2.1	308.1	40.7	4×630	4P-Δ	10800	20.0	53227	54	35	415
HCH 6304 333-4S	151.65	152.77	57	2.1	308.1	40.7	4×630	4P-Y	7000	11.6	40490	54	35	415
HCH 6305 278-4D	200.32	203.24	63	2.1	257.4	34.0	5×630	4P-Δ	13500	25.0	75164	67	42	473
HCH 6305 278-4S	170.02	172.03	58	2.1	257.4	34.0	5×630	4P-Y	8750	14.5	57966	67	42	473
HCH 6305 417-4D	232.39	234.82	63	2.1	386.0	51.0	5×630	4P-Δ	13500	25.0	66636	67	42	518
HCH 6305 417-4S	189.9	191.45	58	2.1	386.0	51.0	5×630	4P-Y	8750	14.5	50684	67	42	518
HCH 6306 331-4D	240.29	242.89	64	2.1	306.9	40.5	6×630	4P-Δ	16200	30.0	89981	2×42	2×28	552
HCH 6306 331-4S	201.82	203.8	59	2.1	306.9	40.5	6×630	4P-Y	10500	17.4	69329	2×42	2×28	552
HCH 6306 497-4D	278.39	281.01	64	2.1	460.3	60.8	6×630	4P-Δ	16200	30.0	79637	2×42	2×28	607
HCH 6306 497-4S	226.99	228.75	59	2.1	460.3	60.8	6×630	4P-Y	10500	17.4	60590	2×42	2×28	607
HCH 6308 443-4D	324	327.68	65	2.1	410.8	54.2	8×630	4P-Δ	21600	40.0	120155	2×54	2×35	695
HCH 6308 443-4S	273.15	275.81	60	2.1	410.8	54.2	8×630	4P-Y	14000	23.2	92630	2×54	2×35	695
HCH 6308 665-4D	372.81	376.09	65	2.1	616.2	81.4	8×630	4P-Δ	21600	40.0	106454	2×54	2×35	768
HCH 6308 665-4S	303.3	305.55	60	2.1	616.2	81.4	8×630	4P-Y	14000	23.2	80979	2×54	2×35	768
HCH 63010 556-4D	400.65	406.47	66	2.1	514.7	68.0	10×630	4P-Δ	27000	50.0	150328	2×67	2×42	865
HCH 63010 556-4S	340.03	344.05	61	2.1	514.7	68.0	10×630	4P-Y	17500	29.0	115931	2×67	2×42	865
HCH 63010 833-4D	464.79	469.63	66	2.1	772.1	101.9	10×630	4P-Δ	27000	50.0	133272	2×67	2×42	956
HCH 63010 833-4S	379.79	382.9	61	2.1	772.1	101.9	10×630	4P-Y	17500	29.0	101367	2×67	2×42	956
HCH 63012 668-4D	468.07	477.07	67	2.1	618.7	81.7	12×630	4P-Δ	32400	60.0	180501	2×67	2×42	1010
HCH 63012 668-4S	400.76	406.96	62	2.1	618.7	81.7	12×630	4P-Y	21000	34.8	139232	2×67	2×42	1010
HCH 63012 1002-4D	549.2	556.71	67	2.1	928.0	122.5	12×630	4P-Δ	32400	60.0	160089	2×67	2×42	1119
HCH 63012 1002-4S	451.78	456.45	62	2.1	928.0	122.5	12×630	4P-Y	21000	34.8	121755	2×67	2×42	1119

Model / 型号	Capacity / 制冷量 (kW)		Sound Pressure Level/ 声压	Fin Spacing/ 片距 (mm)	Surface/ 面积 (m2)	Volumen Interno/ 管容积 (dm3)	Ventilator 风机					Connec-tion/ 接口尺寸 (ø mm)		N.W/ 净重 (kg)
	R404A	R448A/ R449A	距离 =10m				N° × Ø (mm)	Pole connection 极数 接线	Power/ 功率 (W)	Current/ 电流 (A)	Air Flow/ 风量 (m3/h)	Inlet/ 进口	Outlet/ 出口	
	DT1=15K	DT1=15K	dBA											
HCH 8002 200-6D	106.36	107.53	51	2.1	184.9	24.4	2×800	6P-Δ	3200	7.0	34121	54	35	335
HCH 8002 200-6S	81.52	82.18	42	2.1	184.9	24.4	2×800	6P-Y	1600	3.1	23455	54	35	335
HCH 8002 299-6D	118.19	119.07	51	2.1	277.4	36.6	2×800	6P-Δ	3200	7.0	30353	54	35	368
HCH 8002 299-6S	86.22	86.65	42	2.1	277.4	36.6	2×800	6P-Y	1600	3.1	20592	54	35	368
HCH 8003 301-6D	161.14	162.54	53	2.1	279.1	36.8	3×800	6P-Δ	4800	10.5	51318	54	35	484
HCH 8003 301-6S	122.56	123.41	44	2.1	279.1	36.8	3×800	6P-Y	2400	4.7	35289	54	35	484
HCH 8003 452-6D	177.25	178.75	53	2.1	418.6	55.3	3×800	6P-Δ	4800	10.5	45677	54	35	533
HCH 8003 452-6S	129.73	130.49	44	2.1	418.6	55.3	3×800	6P-Y	2400	4.7	30997	54	35	533
HCH 8004 403-6D	214.38	216.66	54	2.1	373.2	49.3	4×800	6P-Δ	6400	14.0	68514	67	42	612
HCH 8004 403-6S	164.22	165.51	45	2.1	373.2	49.3	4×800	6P-Y	3200	6.2	47122	67	42	612
HCH 8004 604-6D	229.35	232.57	54	2.1	559.8	73.9	4×800	6P-Δ	6400	14.0	61001	67	42	677
HCH 8004 604-6S	170.53	172.02	45	2.1	559.8	73.9	4×800	6P-Y	3200	6.2	41401	67	42	677
HCH 8005 504-6D	262.07	266.01	55	2.1	467.4	61.7	5×800	6P-Δ	8000	17.5	85710	67	42	759
HCH 8005 504-6S	203.1	205.22	46	2.1	467.4	61.7	5×800	6P-Y	4000	7.8	58956	67	42	759
HCH 8005 757-6D	294.26	297.15	55	2.1	701.0	92.6	5×800	6P-Δ	8000	17.5	76324	67	42	842
HCH 8005 757-6S	216.28	217.66	46	2.1	701.0	92.6	5×800	6P-Y	4000	7.8	51805	67	42	842
HCH 8006 602-6D	322.27	325.08	56	2.1	558.1	73.7	6×800	6P-Δ	9600	21.0	102635	2×54	2×35	864
HCH 8006 602-6S	245.13	246.81	47	2.1	558.1	73.7	6×800	6P-Y	4800	9.3	70577	2×54	2×35	864
HCH 8006 904-6D	354.5	357.5	56	2.1	837.2	110.5	6×800	6P-Δ	9600	21.0	91354	2×54	2×35	963
HCH 8006 904-6S	259.46	260.98	47	2.1	837.2	110.5	6×800	6P-Y	4800	9.3	61993	2×54	2×35	963
HCH 8008 806-6D	428.75	433.32	57	2.1	746.4	98.5	8×800	6P-Δ	12800	28.0	137027	2×67	2×42	1094
HCH 8008 806-6S	328.44	331.02	48	2.1	746.4	98.5	8×800	6P-Y	6400	12.4	94244	2×67	2×42	1094
HCH 8008 1208-6D	458.71	465.14	57	2.1	1119.6	147.8	8×800	6P-Δ	12800	28.0	122001	2×67	2×42	1225
HCH 8008 1208-6S	341.06	344.05	48	2.1	1119.6	147.8	8×800	6P-Y	6400	12.4	82801	2×67	2×42	1225
HCH 80010 1009-6D	524.13	532.02	58	2.1	934.7	123.4	10×800	6P-Δ	16000	35.0	171419	2×67	2×42	1351
HCH 80010 1009-6S	406.2	410.43	49	2.1	934.7	123.4	10×800	6P-Y	8000	15.5	117911	2×67	2×42	1351
HCH 80010 1513-6D	588.52	594.31	58	2.1	1402.1	185.1	10×800	6P-Δ	16000	35.0	152648	2×67	2×42	1516
HCH 80010 1513-6S	432.55	435.32	49	2.1	1402.1	185.1	10×800	6P-Y	8000	15.5	103609	2×67	2×42	1516

AVAILABLE OPTIONS FOR HCV SERIES:

Casing options:
- Coated on customer's request

HCH 系列选配件:

外壳:
-可按客户要求喷涂

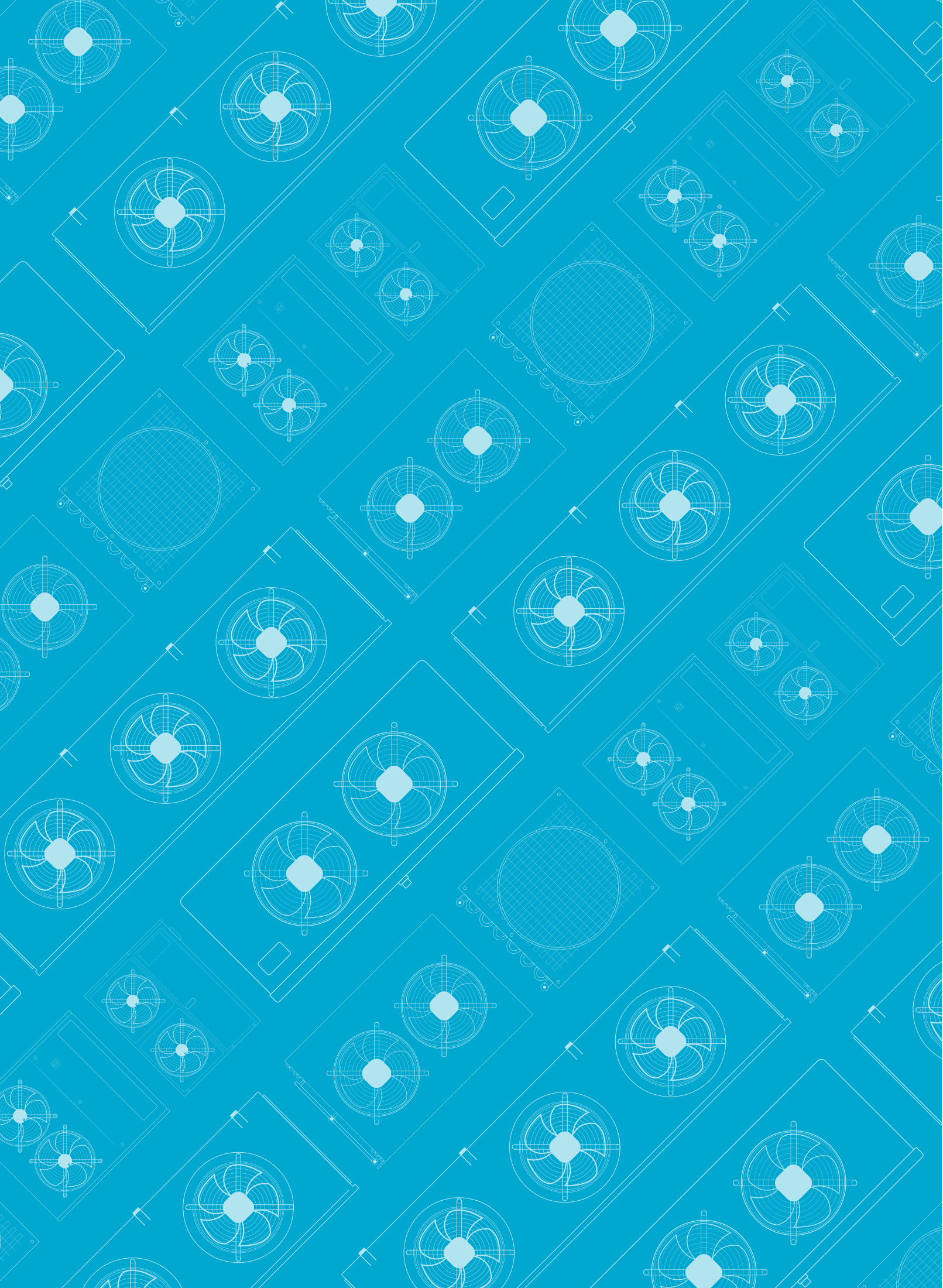

GAS COOLERS
GAS COOLERS

The exchange coils used in the HCBS CO2 range are highly efficient with special profile aluminum fins and ø7 mm (HCBS) internally grooved tubes. They are supplied clean and tested under a pressure of 30 bar.

Supported to the casing by means of a “floating” system that avoids any kind of contact between the copper tubes and the supporting end plates, assu- ring a long life for the condenser without leaks.

On outdoor units, Blue Fin coating helps protect the parts from corrosion.

HCBS CO2 SERIES GAS COOLERS
气冷器系列 HCBS CO2

HCBS CO2的高效内芯采用铝箔和ø7mm内螺纹铜管。所有内芯均经过清洁和30bar保压测试。

外壳采用“悬浮”结构，以避免铜管和侧板板之间产生接触，确保冷凝器的使用寿命长且无泄漏。

在室外设备上，蓝色翅片有助于保护部件免受腐蚀。

The standard electric fans used in this range have the following characteristics:

- ø200 mm: single-phase 230V/1/50 Hz with shade pole motor, with grid and short nozzle. Operating temperature -30ºC to +50ºC.

- ø250, 300, 350, 400 mm: single-phase 230V/1/50 Hz with external rotor, with type K grid and nozzle (short mouth). Operating temperature -40ºC to +50ºC.

-ø450, 500, 630, 710, 800 mm: three-phase 400V/3/50 Hz with external rotor, with type K grid and nozzle (short mouth). Operating temperature -40ºC to +50ºC.

Black galvanized steel casing with high resistance to corrosion and impacts.

For performance at work points other than those in this catalog, use the "Unit Selector Hybrid HISPANIA" software.

For special applications and additional information consult our Technical Department.

标准的风机配置如下：

-ø200mm：单相230V/1/50Hz罩极电机，带网罩和短出风口。工作温度-30ºC至+50ºC。

-ø250，300，350，400 mm：单相230V/1/50Hz外转子电机，带K网罩和短出风口。工作温度-30ºC至+50ºC。

-ø450，500，630，710，800 mm：三相400V/3/50Hz外转子电机，带K网罩和短出风口。工作温度-40ºC至+50ºC。

黑色喷涂的镀锌板外壳，有较高的防腐蚀和抗震性能。

可使用"Unit Selector Hybrid HISPANIA"选型软件查询样册以外的工况性能。

更多需求和信息请联系Hispania。

HCBS CO2 - 1HPCD

- Fan number (blank: single, CD: double) / 风机数量（空白：单风机，CD：多风机）
- Horse power / 匹数
- Refrigerant (CO2: CO2)/ 制冷剂(CO2: CO2)
- Series / 系列

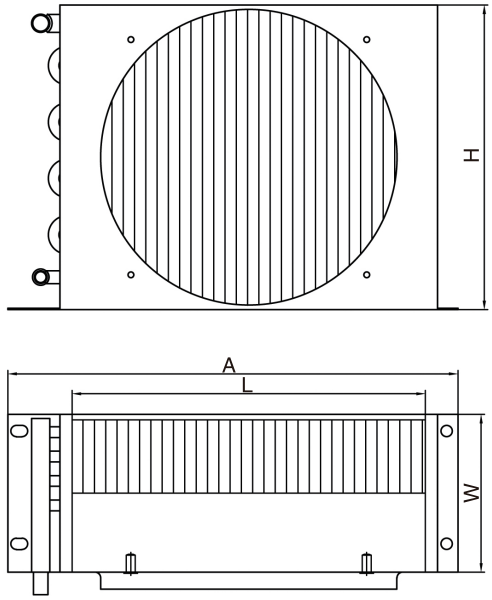
H
A
L
W

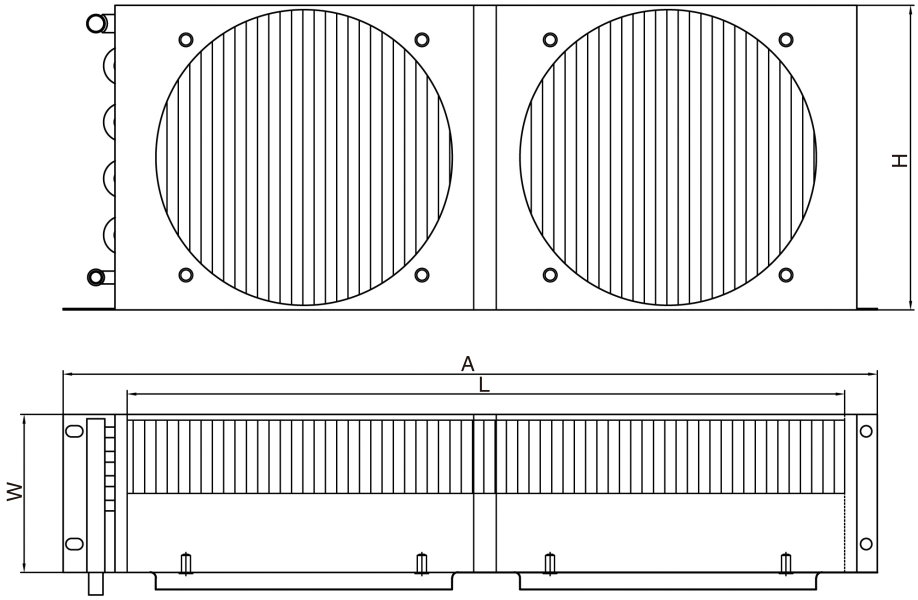
H
A
L
W

Model / 型号	Tubes N° 列数	Capacity / Capacidad CO2 (kW) Pressure =90bar Tin=110ºC	Fin Spacing/ 片距 (mm)	Surface/ 面积 (m2)	Ventilator 风机		Dimension 尺寸 (mm)				Connection/ 接口尺寸 (ø mm)	
					N° × ∅ (mm)	Air Flow 风量 (m3/h)	A	H	W	L	Inlet/ 进口	Outlet/ 出口
HCBS CO2-1/4HP	2 × 11	2.78	3.17	2.14	1 × 250	800	360	281	102	300	7	7
HCBS CO2-1/3HP	3 × 10	3.16	3.17	2.92	1 × 250	630	380	270	120	300	7	7
HCBS CO2-1/2HP	4 × 10	3.48	3.17	3.76	1 × 250	550	380	270	140	290	7	7
HCBS CO2-3/4HP	4 × 12	6.05	3.17	5.44	1 × 300	1100	450	370	152	350	12	10
HCBS CO2-1HP	4 × 14	7.2	3.17	7.26	1 × 300	1260	490	370	152	400	12	10
HCBS CO2-1.5HP	4 × 16	11.64	3.17	10.36	1 × 350	2270	600	422	182	500	12	10
HCBS CO2-2HP	4 × 18	15.99	3.17	13.99	1 × 400	3200	690	473	182	600	15	12
HCBS CO2-2.5HP	5 × 18	17.78	3.17	17.49	1 × 400	3000	710	473	200	600	15	12
HCBS CO2-3HP	6 × 18	18.91	3.17	20.99	1 × 400	2850	710	473	234	600	15	12
HCBS CO2-4HP	6 × 22	21.38	3.17	25.65	1 × 400	3100	710	575	234	600	16	12
HCBS CO2-5HP	4 × 30	33.24	2.83	34.48	1 × 450	6100	910	780	215	800	22	15
HCBS CO2-1HPCD	4 x 10	4.23	3.17	6.48	2 x 200	650	590	270	140	500	12	10
HCBS CO2-1.5HPCD	4 x 11	7.55	3.17	9.41	2 x 250	1300	737	305	140	660	12	10
HCBS CO2-2HPCD	4 x 12	12.29	3.17	12.44	2 x 300	2380	900	370	152	800	15	12
HCBS CO2-3HPCD	4 × 16	23.01	2.83	22.99	2 × 350	4500	1110	420	182	1000	16	12
HCBS CO2-4HPCD	4 × 20	26.81	2.83	28.74	2 × 350	4980	1110	525	182	1000	22	15
HCBS CO2-5HPCD	4 × 24	34.32	2.83	34.48	2 × 400	6500	1110	625	195	1000	22	15
HCBS CO2-6HPCD	4 × 26	38.33	2.83	44.83	2 × 400	7000	1310	680	195	1200	22	15
HCBS CO2-7.5HPCD	4 × 32	57.58	2.83	55.18	2 × 450	11600	1310	830	215	1200	22	18
HCBS CO2-10HPCD	4 × 32	78.02	2.83	73.57	2 × 500	16000	1710	830	230	1600	28	18
HCBS CO2-12HPCD	4 × 36	87.13	2.83	82.76	2 × 630	17800	1710	928	230	1600	28	22
HCBS CO2-15HPCD	4 × 36	92.54	2.83	93.11	2 × 630	18400	1910	928	230	1800	28	22
HCBS CO2-18HPCD	4 × 36	112.25	2.54	113.14	3 × 500	24000	2090	928	230	1980	28	22
HCBS CO2-20HPCD	4 × 42	118.85	2.83	123.35	2 × 710	24000	2110	1075	227	2044	28	22
HCBS CO2-25HPCD	4 × 42	126.08	2.83	132.77	2 × 710	25000	2310	1075	227	2200	28	22
HCBS CO2-30HPCD	5 × 42	142.38	2.83	194.86	2 × 710	24000	2310	1075	227	2200	35	22

AVAILABLE OPTIONS FOR HCBS CO2 SERIES:

Casing options:
- Coated on customer's request

HCBS CO2 系列选配件:

外壳:
-可按客户要求喷涂

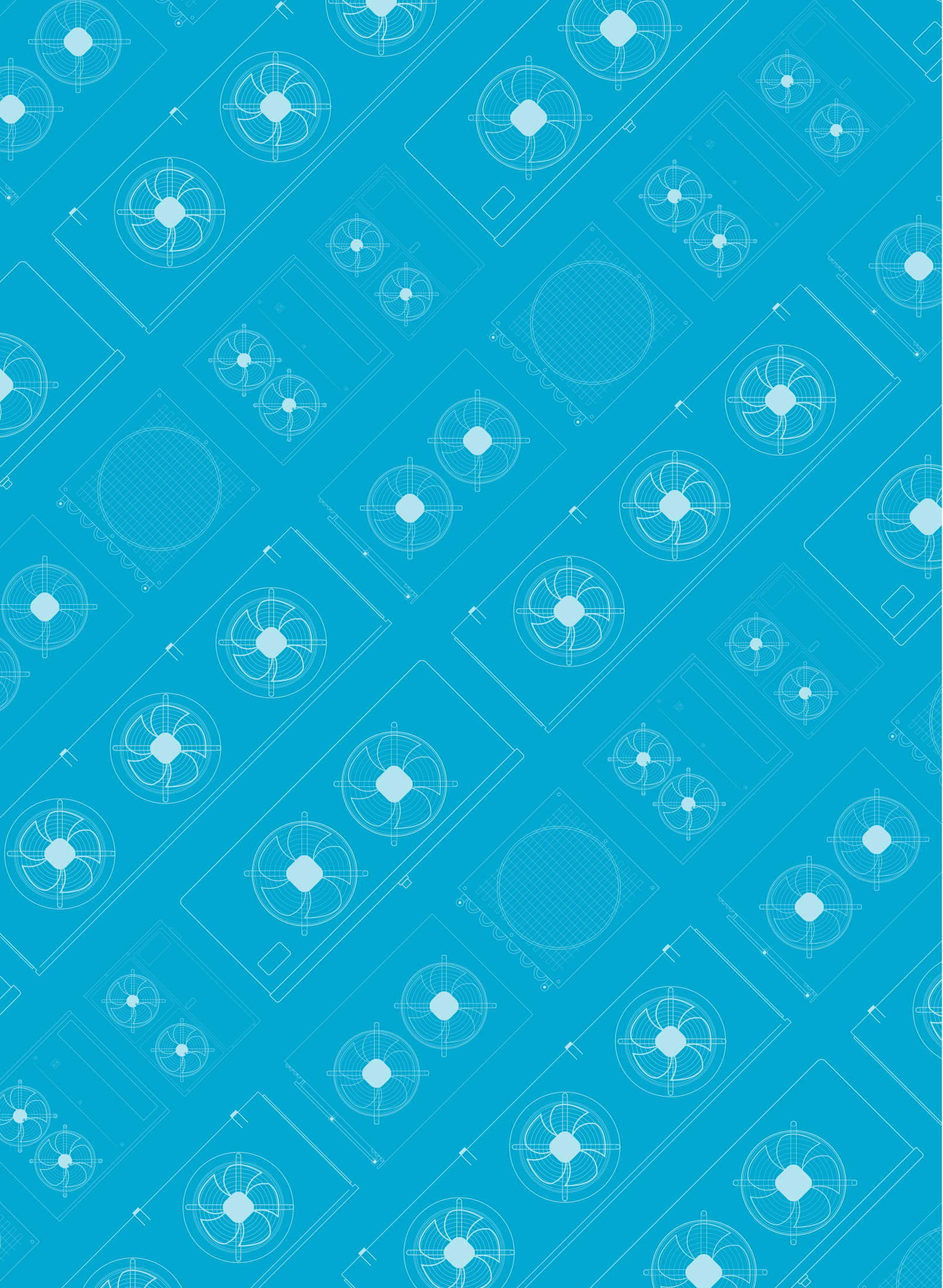

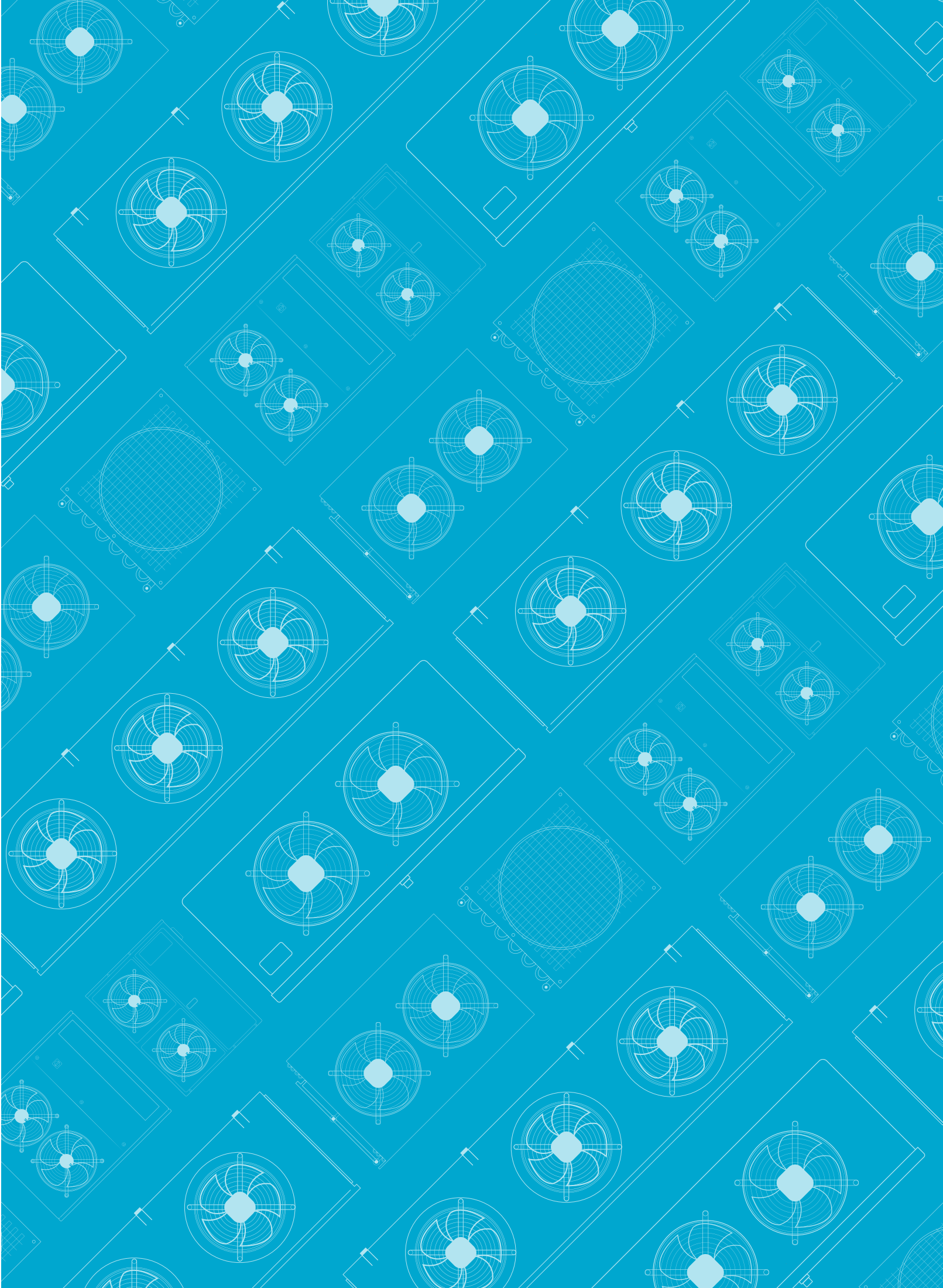

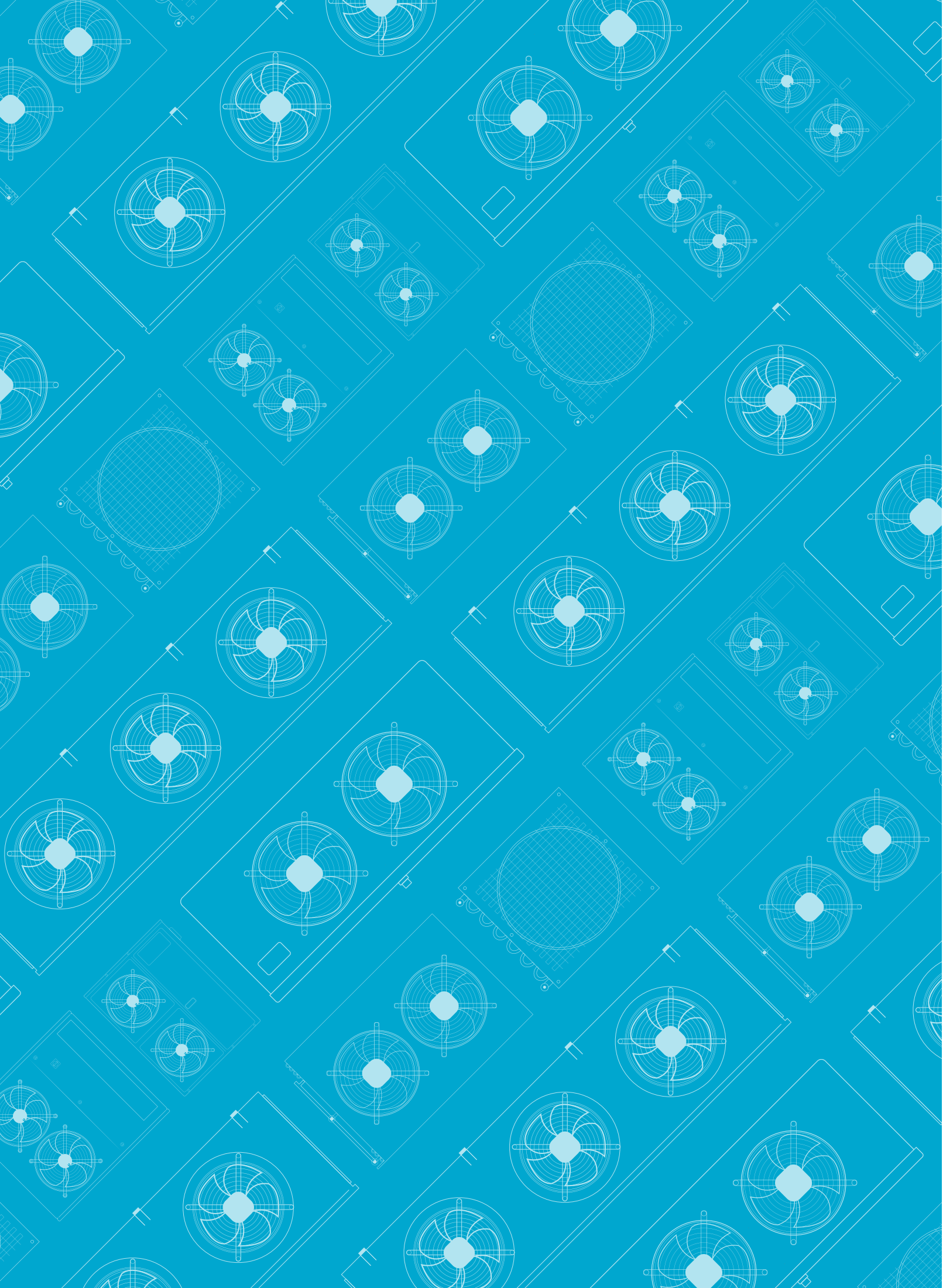

工厂（中国）：
泰州伊士班尼亚制冷设备有限公司
地址：江苏省泰州经济开发区高新技术园标准厂房B区10号
电话：0523-80805003
手机：139-5117-1078; 158-9640-0800; 136-2517-8025; 13222488188
传真：0523-80805666
邮箱：taz39528116@126.com; tzlzw2018@sina.com;
625293588@qq.com; 1367297073@qq.com
网址：http://www.hispaniacorp.com.cn;
http://www.hispaniacorp.com